YAMAHA

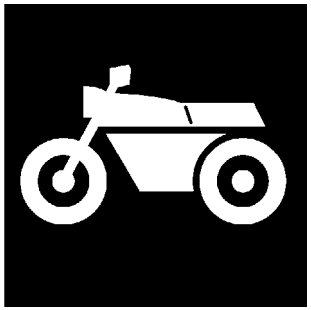

# PARTS CATALOGUE

# DT125X (2C81) EUROPE

1C2C8-300E1

(2C2C8-300E1)

YAMAHA GENUINE Parts & Accessories

OCTOBER, 22. 2008

| NEWS Nº | DATE | COMMENT |
|---|---|---|
| IR07-014 | Sep. 04, 2007 | FIG. 23 FRONT FORK |
| IR07-011 | Aug. 28, 2007 | FIG. 37 METER |
| IR07-002 | Feb. 28, 2007 | FIG. 6 INTAKE |

A2

| NEWS Nº | DATE | COMMENT |
|---|---|---|
| IR07-001 | Jan. 18, 2007 | FIG. 31 FRONT MASTER CYLINDER |
| | | |
| | | |
| | | |

DT125X
PARTS CATALOGUE
©2008 by Yamaha Motor España S.A.
1st edition, October 2008
All rights reserved.
Any reprinting or unauthorized use
without the written permission of
Yamaha Motor España S.A.
is expressly prohibited.
Printed in Spain.

# FOREWORD

This Parts Catalogue is related to the parts for the model(s) on the cover page. When you are ordering replacement parts, please refer to this Parts Catalogue and quote both part numbers and part names correctly.

1. Modifications or additions which have been made after the issue of the Parts Catalogue will be announced in the Parts News.
   It is advisable that you make the necessary corrections to the Parts Catalogue according to the Parts News.

2. Abbreviations
   The following abbreviations are used in this Parts Catalogue.

   "UR" Use specified parts number.
   "UN" Use as many as needed.
   "AP" Alternate Parts
   "LM" Locally Made (Parts need to be ordered locally)
   "F#" Frame No. (Applicable machine No.)
   "O/S" Over Size

3. The number of components for assembly
   - Parts, which are to be supplied in an assembly, are listed with a dot (.) in front of the part name as shown below.
   - The numeral appearing to the right of each component part indicates the quantity of parts for each assembly unit.

| PART NO. | DESCRIPTION | Q'TY | REMARKS |
|---|---|---|---|
| 2F5–83310–60 | FRONT FLASHER LIGHT ASSY | 2 | |
| 115–83311–60 | .BULB (6V–18W) | 1 | |

4. Applicable colours of graphics are represented in the "REMARKS" as shown below.

| PART NO. | DESCRIPTION | Q'TY | REMARKS |
|---|---|---|---|
| 2N4–24110–00–X5 | FUEL TANK COMP. | 2 | MXR |
| 3J1–24240–10 | .GRAPHIC, FUEL TANK | 1 | FOR MXR |

5. Note that the illustrations for reference in finding parts numbers are not to be used for assembling. When assembling, please use the applicable service manual.

6. The asterisk (*) before a reference number indicates modified items after the first edition.

7. Applicable Serial No.

Engine Serial No.

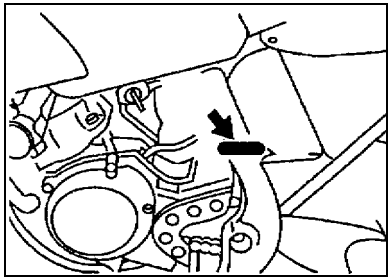

Frame Serial No.

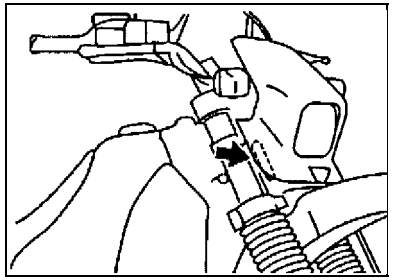

8. Applicable Colour Code (The (*) mark shows Model colour.)

| Abbreviation | Colour Name | Colour Code |
|---|---|---|
| DPBSE(*) | DEEP PURPLISH BLUE SOLID E | 0583 |
| LGB | LOW GLOSS BLACK | 0098 |
| SL | SILVER | 0035 |
| | | |
| | | |
| | | |
| | | |
| | | |
| | | |
| | | |

# MODEL LABEL

(1) A label called “Model Label” is affixed in the location as indicated in (3) below. When using this parts catalogue, please be sure to cross–reference the “model code – production code No.” in the catalogue with the “model code – production code No.” indicated on the Model Label affixed onto the product concerned.

(2) “Model Label” Indication

| | |
|---|---|
| a b<br>○ xxxx – xxx<br>● x c | a: Model Type Code<br>b: Production Code No.<br>c: Colouring Type |

| |
|---|
| ○ 4TW1–010<br>● A |

(3) Model Label Affixing Location

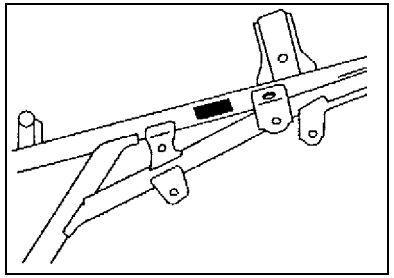

(4) Colouring Information

| Model Code | Colouring Type Code | Colour Code | Colour Name | Abbreviation |
|---|---|---|---|---|
| 2C81 | A | 0583 | DEEP PURPLISH BLUE SOLID E | DPBSE |
| | | | | |
| | | | | |
| | | | | |
| | | | | |
| | | | | |
| | | | | |
| | | | | |
| | | | | |
| | | | | |

(5) Model Code – Production Code Number of Model Listed in This Parts Catalogue

| Model Code | Production Code No. | Country (destination) | Model Code | Production Code No. | Country (destination) |
|---|---|---|---|---|---|
| 2C81 | 030 | PORTUGAL | | | |
| | 040 | DENMARK | | | |
| | | NORWAY | | | |
| | | SWEDEN | | | |
| | 050 | CZECHO | | | |
| | | FINLAND | | | |
| | | GREECE | | | |
| | | HUNGARY | | | |
| | | POLAND | | | |
| | | SLOVENIA | | | |
| | | TURKEY | | | |
| | | | | | |
| | | | | | |
| | | | | | |
| | | | | | |
| | | | | | |
| | | | | | |
| | | | | | |
| | | | | | |
| | | | | | |
| | | | | | |
| | | | | | |
| | | | | | |
| | | | | | |
| | | | | | |

# CONTENTS

## ENGINE


CYLINDER ..... B2
CRANKSHAFT & PISTON ..... B4
WATER PUMP ..... B6
RADIATOR & HOSE ..... B7
OIL PUMP ..... B9
INTAKE ..... B10
CARBURETOR ..... B12
EXHAUST ..... B14
CRANKCASE ..... C2
CRANKCASE COVER 1 ..... C3
STARTER ..... C4
CLUTCH ..... C5
TRANSMISSION ..... C7
SHIFT CAM & FORK ..... C9
SHIFT SHAFT ..... C10


## CHASSIS


FRAME ..... C11
FENDER ..... C13
SIDE COVER ..... C14
OIL TANK ..... D2
REAR ARM ..... D4
REAR SUSPENSION ..... D6
STEERING ..... D7
FRONT FORK ..... D8
FUEL TANK ..... D10
SEAT ..... D11
FRONT WHEEL ..... D12
FRONT BRAKE CALIPER ..... D13
REAR WHEEL ..... D14
REAR BRAKE CALIPER ..... D15
STEERING HANDLE & CABLE ..... E2
FRONT MASTER CYLINDER ..... E3
STAND & FOOTREST ..... E4
REAR MASTER CYLINDER ..... E6
GENERATOR ..... E7
STARTING MOTOR ..... E8
FLASHER LIGHT ..... E9
METER ..... E10
HEADLIGHT ..... E11
TAILLIGHT ..... E12
HANDLE SWITCH & LEVER ..... E13
ELECTRICAL 1 ..... E14
ELECTRICAL 2 ..... E15


## INDEX


NUMERICAL INDEX ..... M1

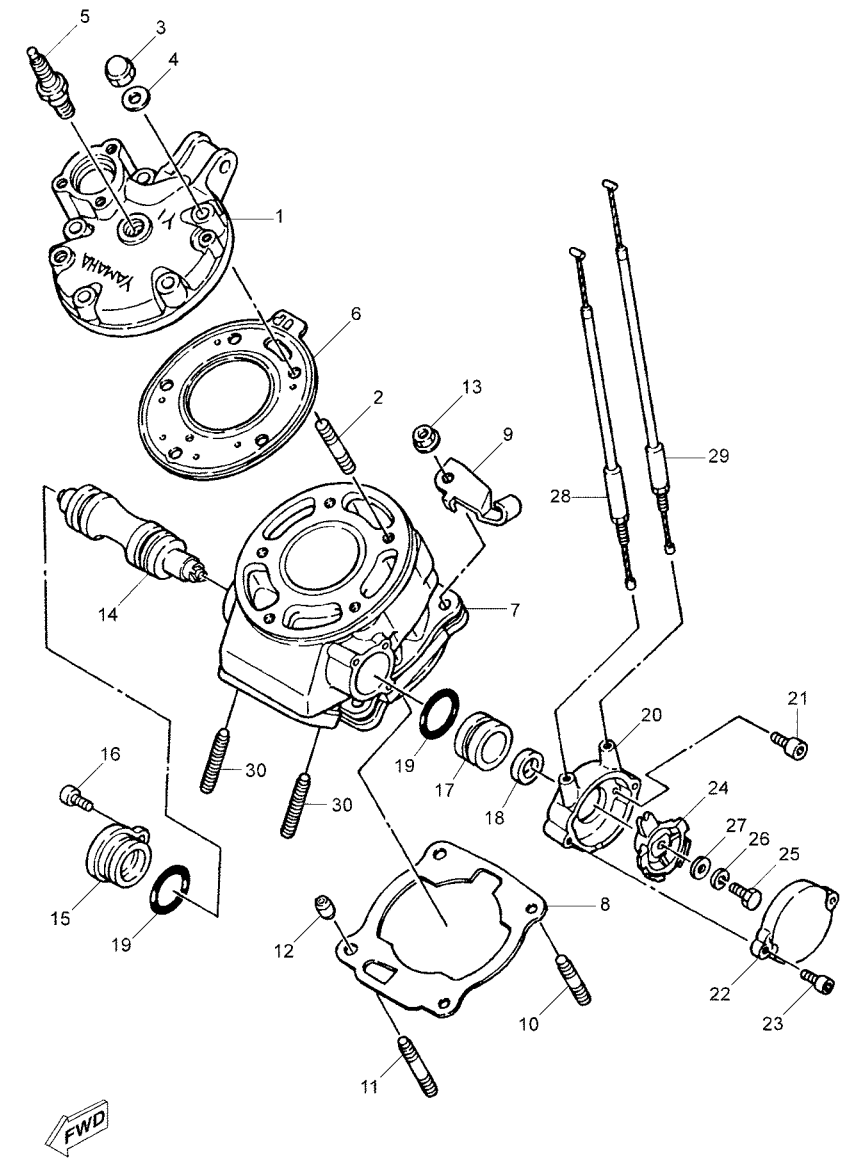


1D01300-C010

## FIG. 1 CYLINDER

| REF. NO. | PART NO. | DESCRIPTION | 2C81 | | | | | REMARKS |
|---|---|---|---|---|---|---|---|---|
| 1 | 3MB–11111–01 | HEAD, CYLINDER 1 | 1 | | | | | |
| 2 | 90116–08394 | BOLT, STUD | 5 | | | | | |
| 3 | 90176–08040 | NUT, CROWN | 5 | | | | | |
| 4 | 90201–08649 | WASHER, PLATE | 5 | | | | | |
| 5 | 94701–00204 | PLUG, SPARK (NGK BR8ES) | 1 | | | | | |
| 6 | 3MB–11181–00 | GASKET, CYLINDER HEAD 1 | 1 | | | | | |
| 7 | 3MB–11311–00 | CYLINDER 1 | 1 | | | | | |
| 8 | 3BN–11351–10 | GASKET, CYLINDER | 1 | | | | | |
| 9 | 3BN–15441–00 | HOLDER, CLUTCH CABLE | 1 | | | | | |
| 10 | 90116–08318 | BOLT, STUD | 2 | | | | | |
| 11 | 90116–08388 | BOLT, STUD | 2 | | | | | |
| 12 | 99530–10114 | PIN, DOWEL | 2 | | | | | |
| 13 | 90179–08299 | NUT | 4 | | | | | |
| 14 | 3RM–1131A–00 | VALVE 1 | 1 | | | | | |
| 15 | 3BN–1131E–00 | HOLDER 1 | 1 | | | | | |
| 16 | 91317–05012 | BOLT | 1 | | | | | |
| 17 | 31K–1131U–00 | HOLDER 3 | 1 | | | | | |
| 18 | 93108–23010 | OIL SEAL | 1 | | | | | |
| 19 | 93210–30640 | O-RING | 2 | | | | | |
| 20 | 2RH–1131M–10 | COVER | 1 | | | | | |
| 21 | 91317–05010 | BOLT | 2 | | | | | |
| 22 | 2RH–1131R–10 | CAP, SEAL | 1 | | | | | |
| 23 | 9131M–05012 | BOLT | 2 | | | | | |
| 24 | 29L–1132E–00 | PULLEY 1 | 1 | | | | | |
| 25 | 97027–06018 | BOLT, HEXAGON | 1 | | | | | |
| 26 | 92907–06100 | WASHER, SPRING | 1 | | | | | |
| 27 | 92907–06600 | WASHER, PLATE | 1 | | | | | |

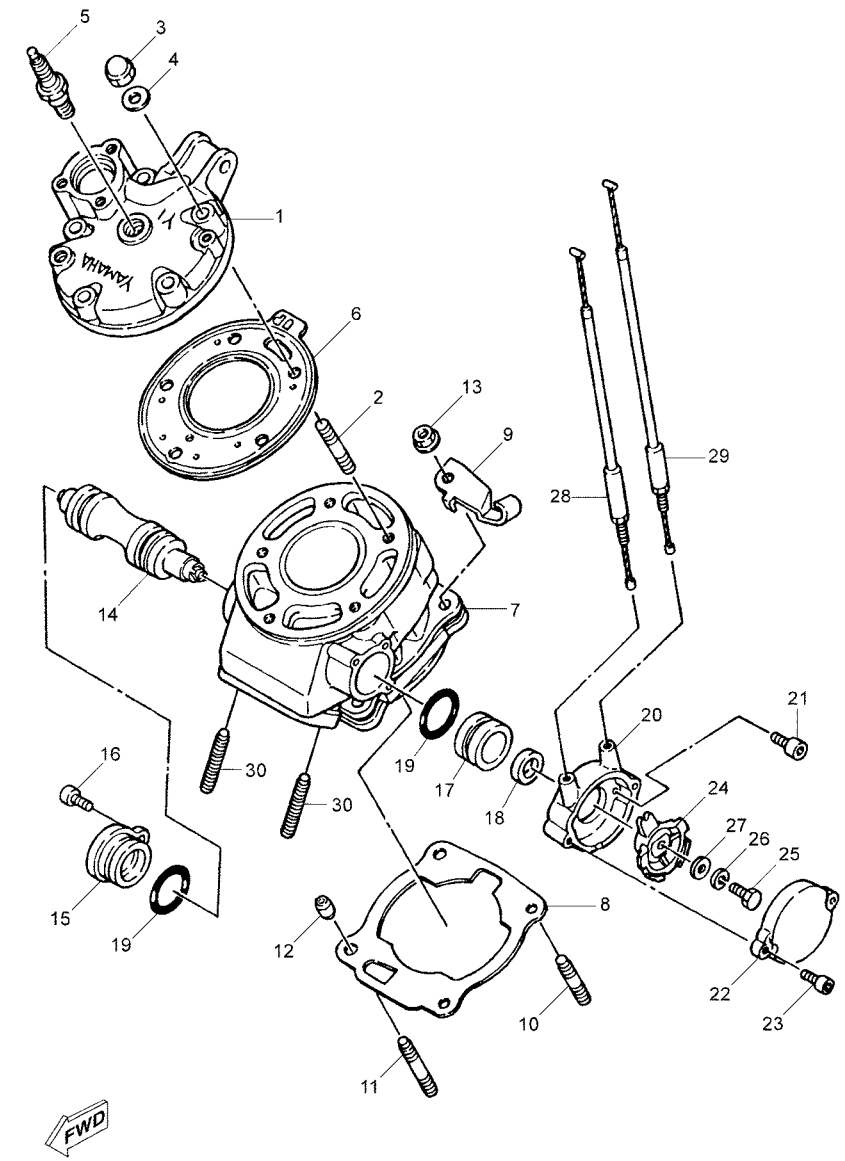


1D01300-C010

## FIG. 1 CYLINDER

| REF. NO. | PART NO. | DESCRIPTION | 2C81 | | | | | REMARKS |
|---|---|---|---|---|---|---|---|---|
| 28 | 3RM–1133E–00 | CABLE, PULLEY 1 | 1 | | | | | |
| 29 | 3RM–1133F–00 | CABLE, PULLEY 2 | 1 | | | | | |
| 30 | 90116–08042 | BOLT, STUD | 2 | | | | | |

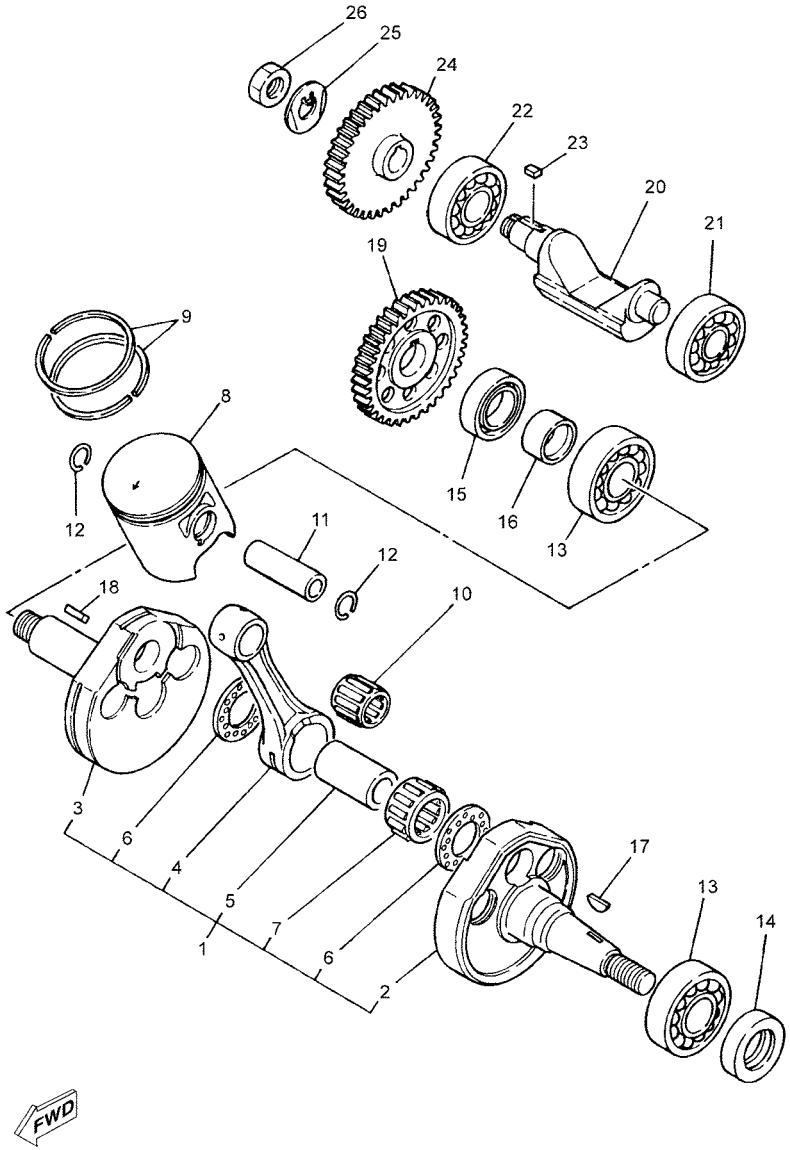


1D01300-C020

## FIG. 2 CRANKSHAFT & PISTON

| REF. NO. | PART NO. | DESCRIPTION | 2C81 | | | | | REMARKS |
|---|---|---|---|---|---|---|---|---|
| 1 | 4FU–11400–00 | CRANKSHAFT ASSY | 1 | | | | | |
| 2 | 3MB–11412–00 | .CRANK 1 | 1 | | | | | |
| 3 | 3MB–11422–00 | .CRANK 2 | 1 | | | | | |
| 4 | 4FU–11651–00 | .ROD, CONNECTING | 1 | | | | | |
| 5 | 37F–11681–00 | .PIN, CRANK 1 | 1 | | | | | |
| 6 | 90209–22292 | .WASHER | 2 | | | | | |
| 7 | 93310–523D2 | .BEARING | 1 | | | | | |
| 8 | 3MB–11631–02–95 | PISTON (STD) | 1 | | | | | UR STD |
| | 3MB–11635–02 | PISTON (0.25MM O/S) | 1 | | | | | AP |
| | 3MB–11636–02 | PISTON (0.50MM O/S) | 1 | | | | | AP |
| 9 | 4FL–11603–00 | PISTON RING SET (STD) | 1 | | | | | UR STD |
| | 4FL–11604–00 | PISTON RING SET (0.25MM O/S) | 1 | | | | | AP |
| | 4FL–11605–00 | PISTON RING SET (0.50MM O/S) | 1 | | | | | AP |
| 10 | 93310–316B4 | BEARING | 1 | | | | | |
| 11 | 3MB–11633–00 | PIN, PISTON | 1 | | | | | |
| 12 | 93450–17129 | CIRCLIP | 2 | | | | | |
| 13 | 93306–30556 | BEARING | 2 | | | | | |
| 14 | 93102–25331 | OIL SEAL | 1 | | | | | |
| 15 | 93103–32099 | OIL SEAL | 1 | | | | | |
| 16 | 90387–202T9 | COLLAR | 1 | | | | | |
| 17 | 90280–03017 | KEY, WOODRUFF | 1 | | | | | |
| 18 | 90282–05047 | KEY, STRAIGHT | 1 | | | | | |
| 19 | 10V–11536–01 | GEAR, DRIVE (43T) | 1 | | | | | |
| 20 | 2RH–11454–00 | WEIGHT 1 | 1 | | | | | |
| 21 | 93306–30210 | BEARING | 1 | | | | | |
| 22 | 93306–20335 | BEARING | 1 | | | | | |
| 23 | 90282–05034 | KEY, STRAIGHT | 1 | | | | | |

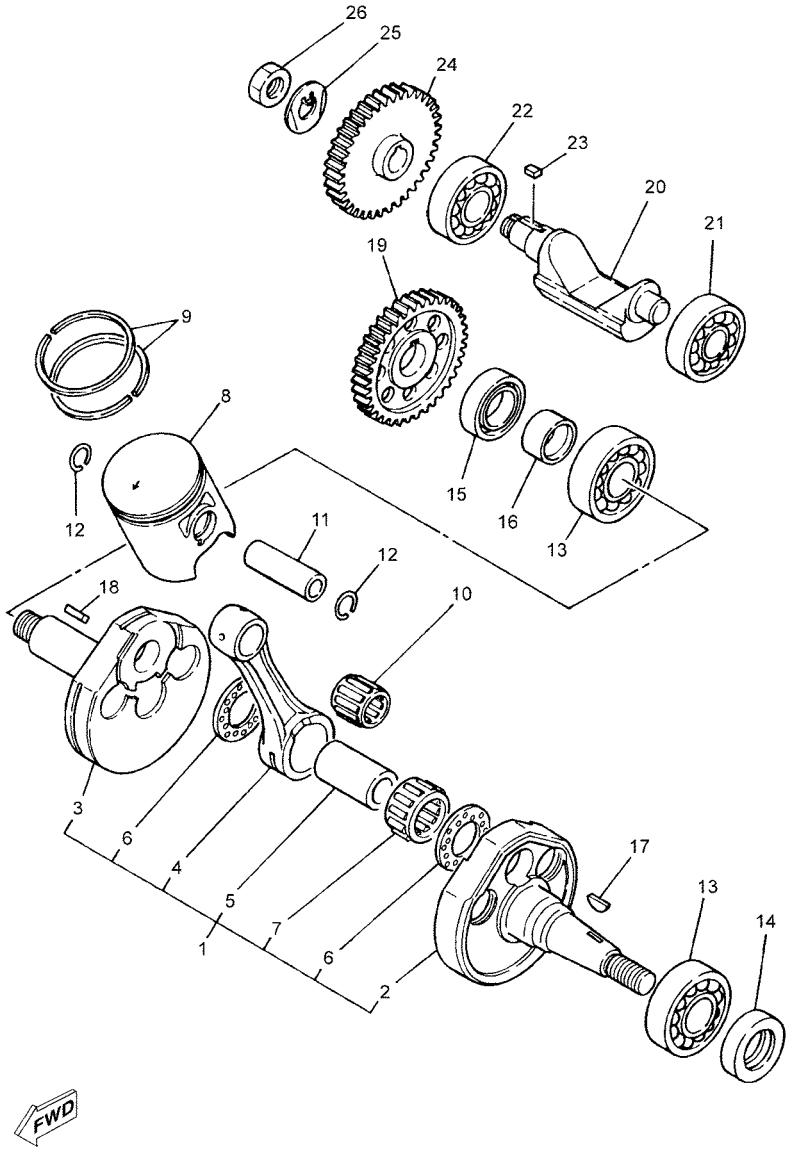


1D01300-C020

## FIG. 2 CRANKSHAFT & PISTON

| REF. NO. | PART NO. | DESCRIPTION | 2C81 | | | | | REMARKS |
|---|---|---|---|---|---|---|---|---|
| 24 | 55K–11530–00 | BALANCER WIEGHT GEAR COMP.43T | 1 | | | | | |
| 25 | 90215–12272 | WASHER, LOCK | 1 | | | | | |
| 26 | 90170–12370 | NUT | 1 | | | | | |

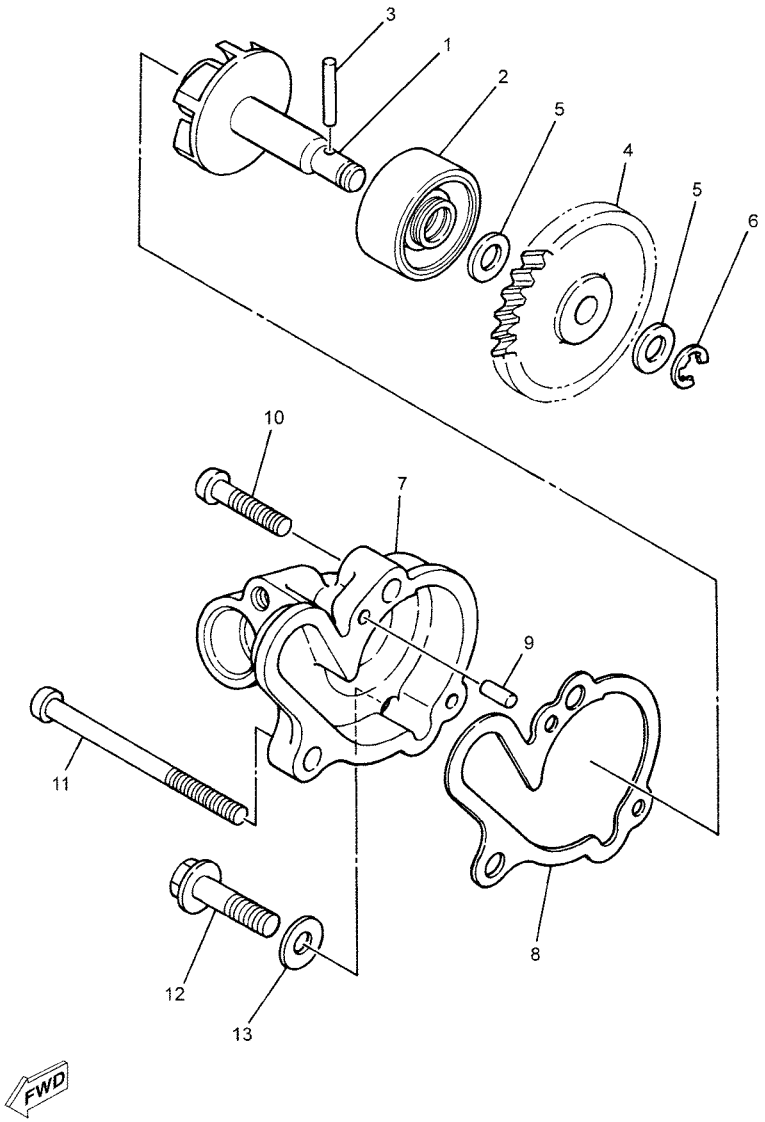


1D01300-C030

## FIG. 3 WATER PUMP

| REF. NO. | PART NO. | DESCRIPTION | 2C81 | | | | | REMARKS |
|---|---|---|---|---|---|---|---|---|
| 1 | 36F–12450–00 | IMPELLER SHAFT ASSY | 1 | | | | | |
| 2 | 93103–10147 | OIL SEAL | 1 | | | | | |
| 3 | 93603–22028 | PIN, DOWEL | 1 | | | | | |
| 4 | 2RH–12459–00 | GEAR, IMPELLER SHAFT | 1 | | | | | |
| 5 | 90201–08512 | WASHER, PLATE | 2 | | | | | |
| 6 | 99001–07600 | CIRCLIP | 1 | | | | | |
| 7 | 3BN–12422–11 | COVER, HOUSING | 1 | | | | | |
| 8 | 3BN–12428–11 | GASKET, HOUSING COVER 2 | 1 | | | | | |
| 9 | 93604–10011 | PIN, DOWEL | 2 | | | | | |
| 10 | 98507–06025 | SCREW, PAN HEAD | 1 | | | | | |
| 11 | 98507–06065 | SCREW, PAN HEAD | 1 | | | | | |
| 12 | 95827–06025 | BOLT, FLANGE | 1 | | | | | |
| 13 | 90430–06166 | GASKET | 1 | | | | | |

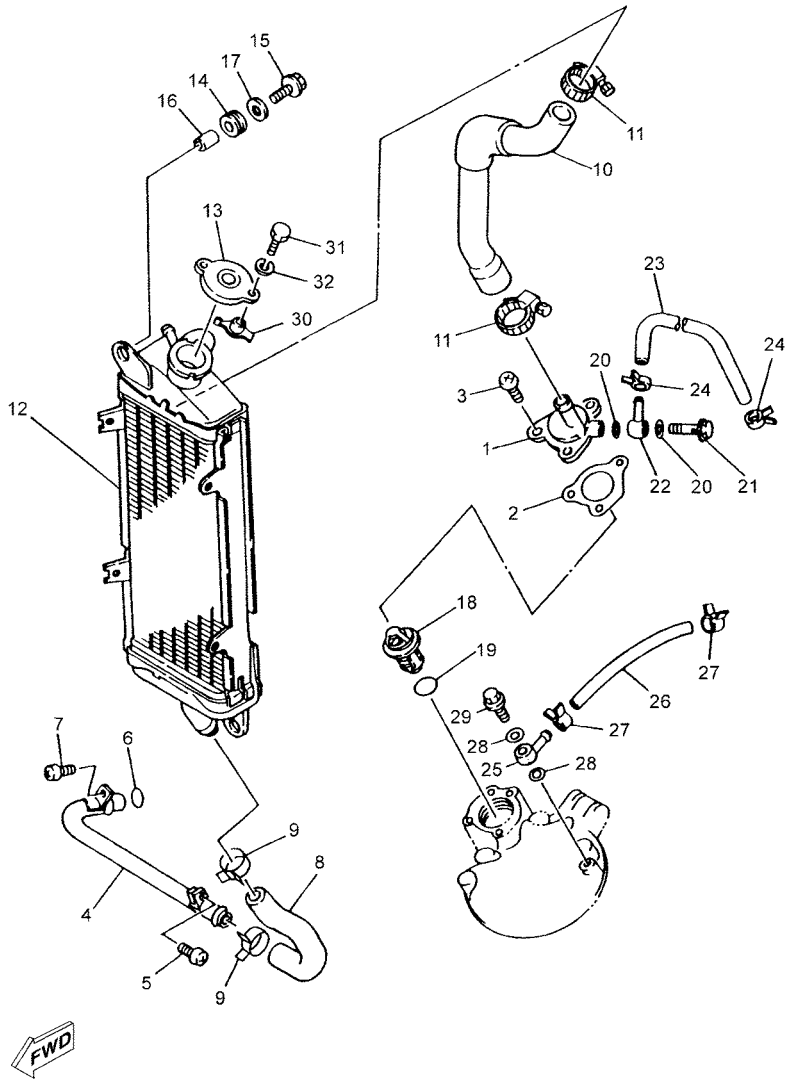


1D01300-C040

## FIG. 4 RADIATOR & HOSE

| REF. NO. | PART NO. | DESCRIPTION | 2C81 | | | | | REMARKS |
|---|---|---|---|---|---|---|---|---|
| 1 | 3BN–12469–00 | JOINT 1 | 1 | | | | | |
| 2 | 3BN–12414–10 | GASKET, COVER | 1 | | | | | |
| 3 | 98507–06020 | SCREW, PAN HEAD | 3 | | | | | |
| 4 | 3BN–12481–00 | PIPE 1 | 1 | | | | | |
| 5 | 98507–06012 | SCREW, PAN HEAD | 1 | | | | | |
| 6 | 93210–12327 | O-RING | 1 | | | | | |
| 7 | 98507–06012 | SCREW, PAN HEAD | 1 | | | | | |
| 8 | 1D0–E2482–00 | PIPE 2 | 1 | | | | | |
| 9 | 90467–20050 | CLIP | 2 | | | | | |
| 10 | 3BN–12483–00 | PIPE 3 | 1 | | | | | |
| 11 | 90450–28014 | HOSE CLAMP ASSY | 2 | | | | | |
| 12 | 3BN–12461–00 | RADIATOR ASSY | 1 | | | | | |
| 13 | 4FL–12462–00 | CAP, RADIATOR | 1 | | | | | |
| 14 | 90480–15363 | GROMMET | 2 | | | | | |
| 15 | 9580M–06025 | BOLT, FLANGE | 2 | | | | | |
| 16 | 90387–0714B | COLLAR | 2 | | | | | |
| 17 | 90201–06072 | WASHER, PLATE | 2 | | | | | |
| 18 | 34X–12411–00 | THERMOSTAT | 1 | | | | | |
| 19 | 93210–27194 | O-RING | 1 | | | | | |
| 20 | 90430–06166 | GASKET | 2 | | | | | |
| 21 | 90401–06115 | BOLT, UNION | 1 | | | | | |
| 22 | 90405–06044 | UNION | 1 | | | | | |
| 23 | 2TV–12476–01 | PIPE 6 | 1 | | | | | |
| 24 | 90467–10038 | CLIP | 2 | | | | | |
| 25 | 90405–06044 | UNION | 1 | | | | | |
| 26 | 2RH–12484–00 | PIPE 4 | 1 | | | | | |
| 27 | 90467–10039 | CLIP | 2 | | | | | |

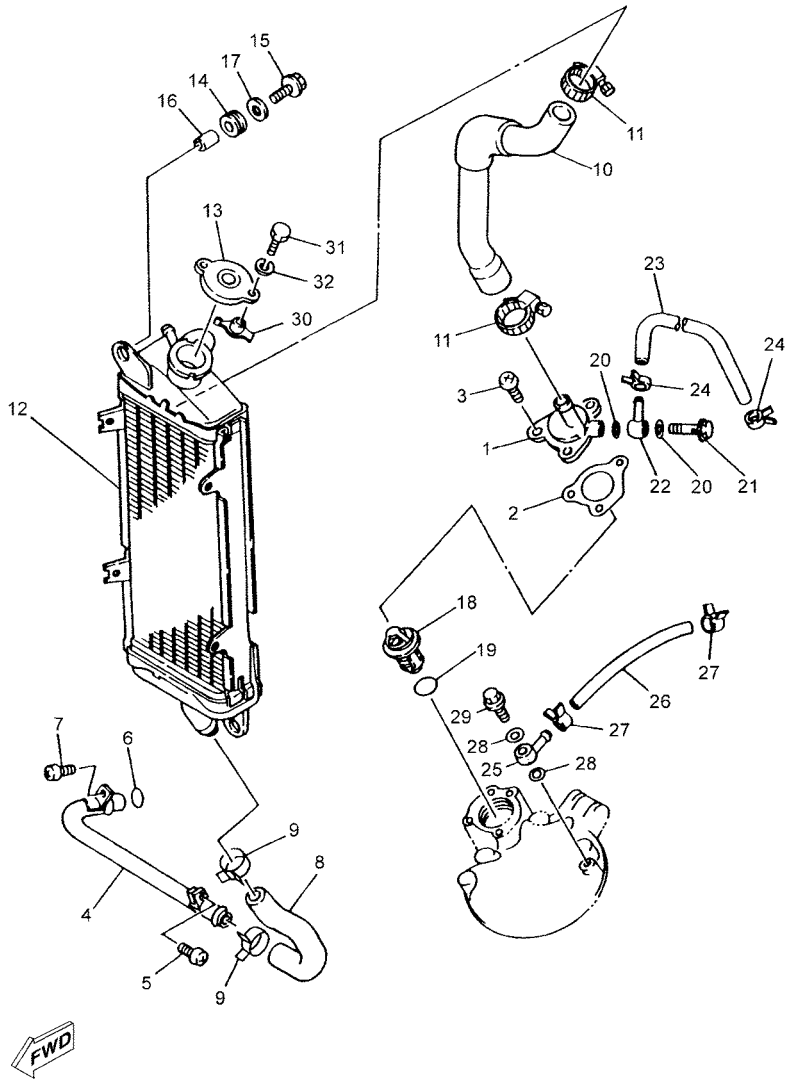


1D01300-C040

## FIG. 4 RADIATOR & HOSE

| REF. NO. | PART NO. | DESCRIPTION | 2C81 | | | | | REMARKS |
|---|---|---|---|---|---|---|---|---|
| 28 | 90430–06166 | GASKET | 2 | | | | | |
| 29 | 90401–06115 | BOLT, UNION | 1 | | | | | |
| 30 | 1KT–12437–00 | STOPPER | 1 | | | | | |
| 31 | 97007–05012 | BOLT | 1 | | | | | |
| 32 | 92907–05600 | WASHER, PLATE | 1 | | | | | |

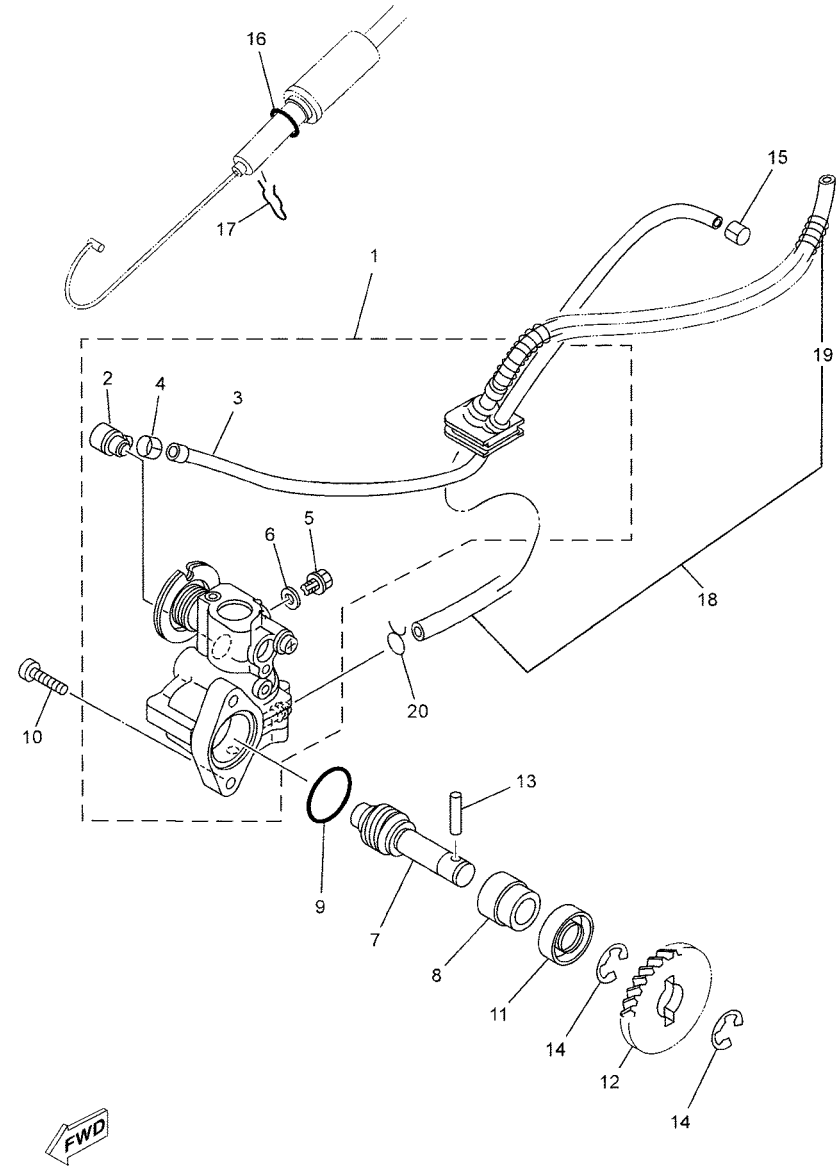


1D01300-C050

## FIG. 5 OIL PUMP

| REF. NO. | PART NO. | DESCRIPTION | 2C81 | | | | | REMARKS |
|---|---|---|---|---|---|---|---|---|
| 1 | 3RM–13101–32 | OIL PUMP ASSY | 1 | | | | | |
| 2 | 353–13552–01 | .NOZZLE | 1 | | | | | |
| 3 | 90445–056K7 | .HOSE (L250) | 1 | | | | | |
| 4 | 90468–02033 | .CLIP | 1 | | | | | |
| 5 | 90149–04318 | .SCREW | 1 | | | | | |
| 6 | 90430–04229 | .GASKET | 1 | | | | | |
| 7 | 4FL–13175–00 | SHAFT, WORM | 1 | | | | | |
| 8 | 4FL–13176–00 | METAL, WORM SHAFT OUTER | 1 | | | | | |
| 9 | 93210–18397 | O-RING | 1 | | | | | |
| 10 | 90157–05079 | SCREW, PAN HEAD | 2 | | | | | |
| 11 | 93101–10001 | OIL SEAL | 1 | | | | | |
| 12 | 10V–13178–01 | GEAR, PUMP DRIVE | 1 | | | | | |
| 13 | 93603–22028 | PIN, DOWEL | 1 | | | | | |
| 14 | 93430–08007 | CIRCLIP | 2 | | | | | |
| 15 | 90468–02033 | CLIP | 1 | | | | | |
| 16 | 93210–07100 | O-RING | 1 | | | | | |
| 17 | 90468–08086 | CLIP | 1 | | | | | |
| 18 | 1D0–13416–00 | PIPE, OIL 1 | 1 | | | | | |
| 19 | 90501–08430 | .SPRING, COMPRESSION | 1 | | | | | |
| 20 | 90467–08003 | CLIP | 2 | | | | | |

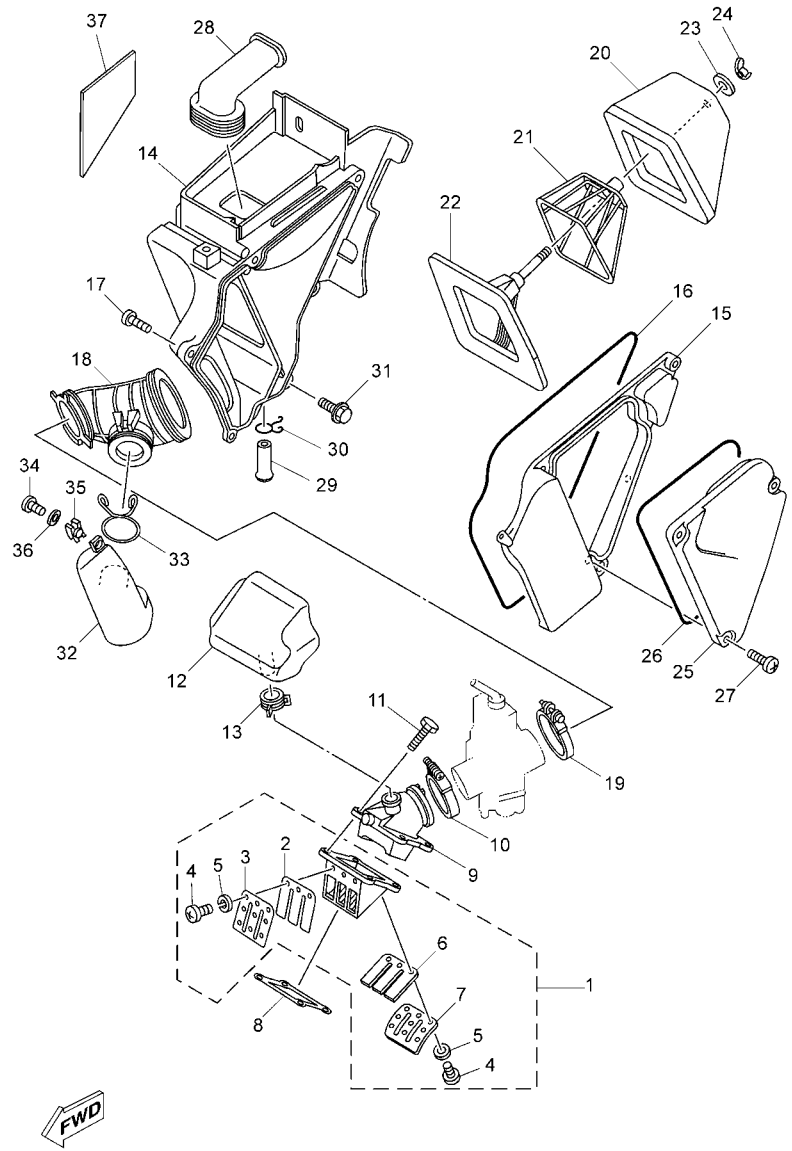


1D01300-C061

## FIG. 6 INTAKE

| REF. NO. | PART NO. | DESCRIPTION | 2C81 | | | | | REMARKS |
|---|---|---|---|---|---|---|---|---|
| 1 | 3MB–13610–00 | REED VALVE ASSY | 1 | | | | | |
| 2 | 2TV–13613–00 | .REED, VALVE | 1 | | | | | |
| 3 | 3BN–13616–00 | .STOPPER, REED VALVE | 1 | | | | | |
| 4 | 98507–03008 | .SCREW, PAN HEAD | 6 | | | | | |
| 5 | 92907–03100 | .WASHER, SPRING | 6 | | | | | |
| 6 | 3MB–13613–00 | .REED, VALVE | 1 | | | | | |
| 7 | 3MB–13616–00 | .STOPPER, REED VALVE | 1 | | | | | |
| 8 | 1KT–13621–01 | GASKET, VALVE SEAT | 1 | | | | | |
| 9 | 3ET–13565–01 | JOINT, CARBURETOR | 1 | | | | | |
| 10 | 90450–44046 | HOSE CLAMP ASSY | 1 | | | | | |
| 11 | 90149–06039 | SCREW | 4 | | | | | |
| 12 | 3ET–13581–00 | CHAMBER, AIR | 1 | | | | | |
| 13 | 90467–20050 | CLIP | 1 | | | | | |
| 14 | 1D0–14411–01 | CASE, AIR CLEANER 1 | 1 | | | | | |
| 15 | 3BN–14421–01 | CASE, AIR CLEANER 2 | 1 | | | | | |
| 16 | 3BN–14452–00 | SEAL | 1 | | | | | |
| 17 | 97707–50520 | SCREW, TAPPING | 6 | | | | | |
| 18 | 3RM–14453–00 | JOINT, AIR CLEANER 1 | 1 | | | | | |
| 19 | 1AE–13575–01 | BAND | 1 | | | | | |
| 20 | 3BN–14451–01 | ELEMENT, AIR CLEANER | 1 | | | | | |
| 21 | 3BN–14458–00 | GUIDE | 1 | | | | | |
| 22 | 3BN–14459–00 | HOLDER, GUIDE | 1 | | | | | |
| 23 | 90209–06096 | WASHER | 1 | | | | | |
| 24 | 90175–06012 | NUT, WING | 1 | | | | | |
| 25 | 4TP–14412–00 | CAP, CLEANER CASE 1 | 1 | | | | | |
| 26 | 17W–14462–00 | SEAL | 1 | | | | | |
| 27 | 90154–05011 | SCREW, BINDING | 3 | | | | | |

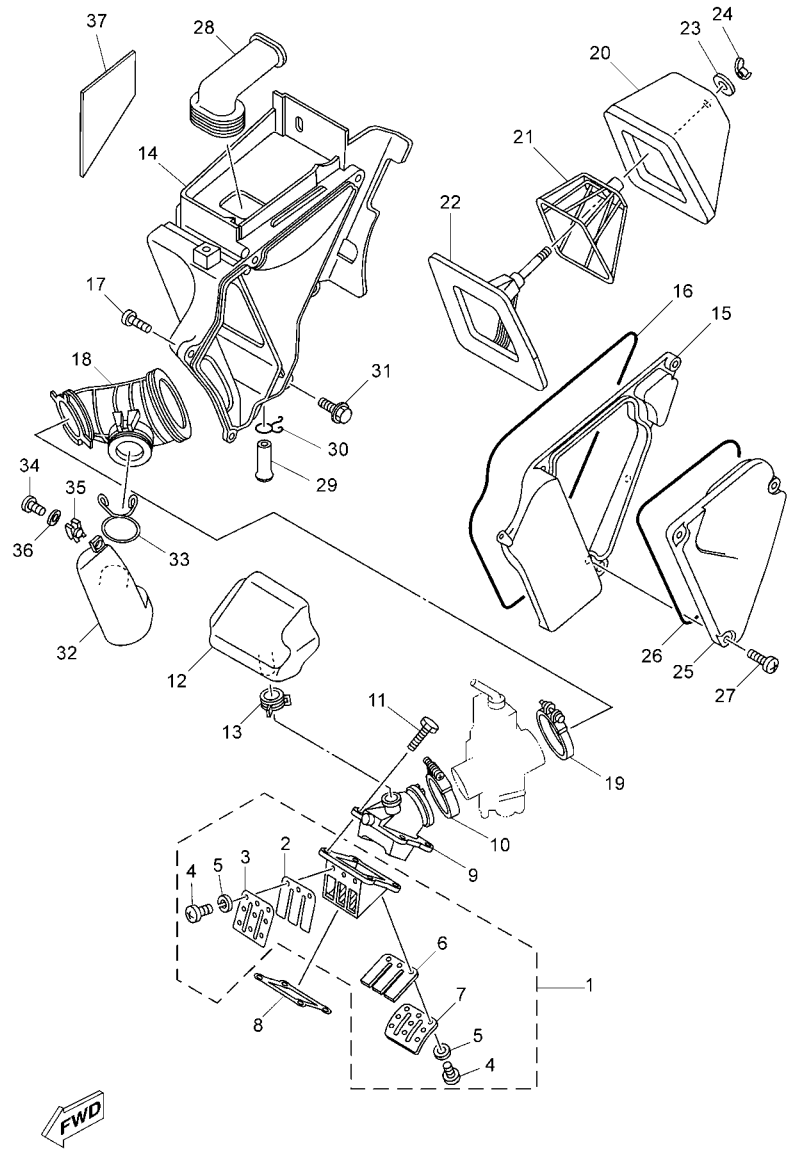


1D01300-C061

## FIG. 6 INTAKE

| REF. NO. | PART NO. | DESCRIPTION | 2C81 | | | | | REMARKS |
|---|---|---|---|---|---|---|---|---|
| 28 | 3ET–14437–00 | DUCT | 1 | | | | | |
| 29 | 34X–1443E–00 | PIPE, DRAIN | 1 | | | | | |
| 30 | 90467–11106 | CLIP | 1 | | | | | |
| 31 | 90119–06123 | BOLT, WITH WASHER | 1 | | | | | |
| 32 | 3FW–13591–00 | CHAMBER, AIR 2 | 1 | | | | | |
| 33 | 90467–35121 | CLIP | 1 | | | | | |
| 34 | 98907–05014 | SCREW, BIND | 1 | | | | | |
| 35 | 90183–05073 | NUT, SPRING | 1 | | | | | |
| 36 | 9290M–05200 | WASHER | 1 | | | | | |
| 37 | 1D0–E4271–01 | INSULATOR | 1 | | | | | |

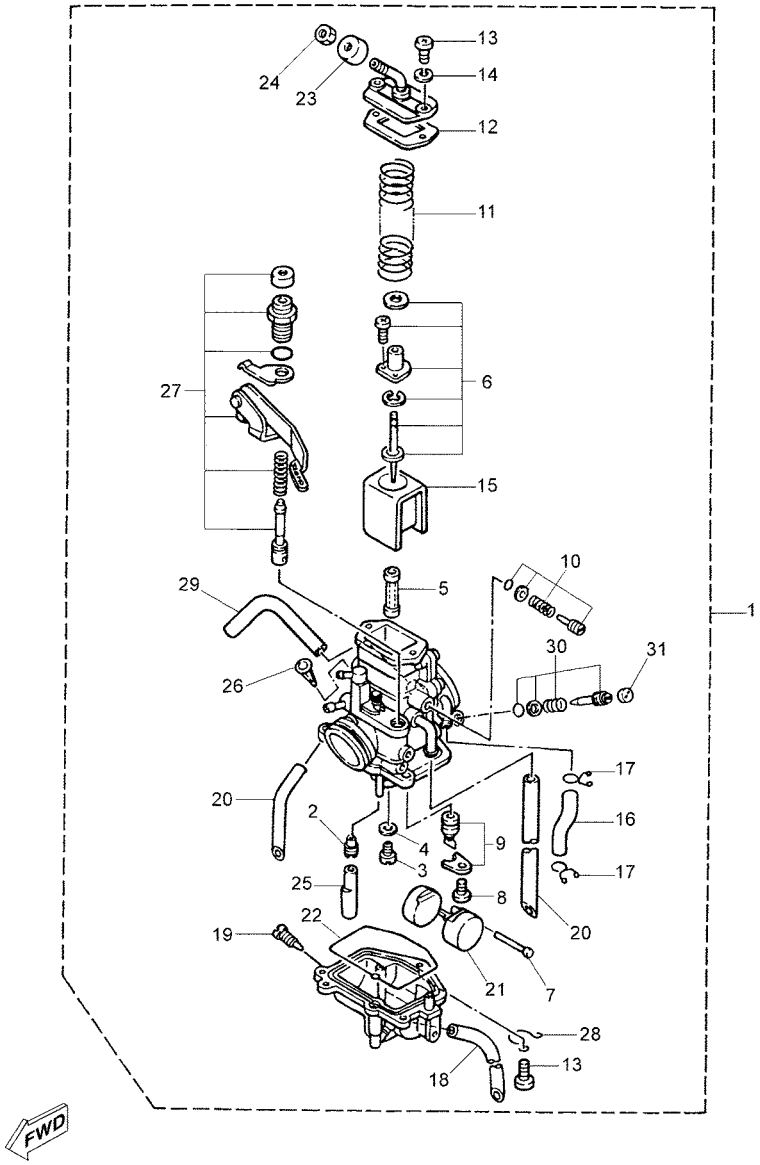


1D01300-C070

## FIG. 7 CARBURETOR

| REF. NO. | PART NO. | DESCRIPTION | 2C81 | | | | | REMARKS |
|---|---|---|---|---|---|---|---|---|
| 1 | 1D0–E4101–00 | CARBURETOR ASSY 1 | 1 | | | | | |
| 2 | 1NT–14142–17 | .JET, PILOT (#17.5) | 1 | | | | | |
| 3 | 137–14143–42 | .JET, MAIN (#210) | 1 | | | | | |
| 4 | 137–14153–00 | .WASHER,MAIN JET | 1 | | | | | |
| 5 | 1D0–E414M–52 | .NOZZLE, MAIN | 1 | | | | | |
| 6 | 1D0–E490J–00 | .NEEDLE SET | 1 | | | | | |
| 7 | 537–14186–00 | .PIN, FLOAT | 1 | | | | | |
| 8 | 98507–04008 | .SCREW, PAN HEAD | 1 | | | | | |
| 9 | 2MA–14107–28 | .NEEDLE VALVE SET | 1 | | | | | |
| 10 | 3ET–14103–00 | .THROTTLE SCREW SET | 1 | | | | | |
| 11 | 1KT–14131–00 | .SPRING, THROTTLE VALVE | 1 | | | | | |
| 12 | 1KT–14198–00 | .GASKET | 1 | | | | | |
| 13 | 98502–04014 | .SCREW, PAN HEAD | 5 | | | | | |
| 14 | 92902–04100 | .WASHER, SPRING | 2 | | | | | |
| 15 | 2TV–14112–25 | .VALVE, THROTTLE 1 | 1 | | | | | |
| 16 | 1KT–14149–00 | .PIPE | 1 | | | | | |
| 17 | 8A7–14139–00 | .CLIP, PIPE | 2 | | | | | |
| 18 | 3X3–14197–00 | .PIPE | 1 | | | | | |
| 19 | 12R–14191–00 | .PLUG, DRAIN | 1 | | | | | |
| 20 | 3MB–14197–00 | .PIPE | 2 | | | | | |
| 21 | 2MA–14185–00 | .FLOAT | 1 | | | | | |
| 22 | 1KT–14147–00 | .O-RING | 1 | | | | | |
| 23 | 3X3–14169–00 | .CAP | 1 | | | | | |
| 24 | 127–14161–00 | .NUT, CABLE ADJUSTING | 1 | | | | | |
| 25 | 3ET–14153–01 | .PLATE,BAFFLE | 1 | | | | | |
| 26 | 1KT–14994–00 | .NET, FILTER | 1 | | | | | |
| 27 | 4FU–1410A–00 | .STARTER SET | 1 | | | | | |

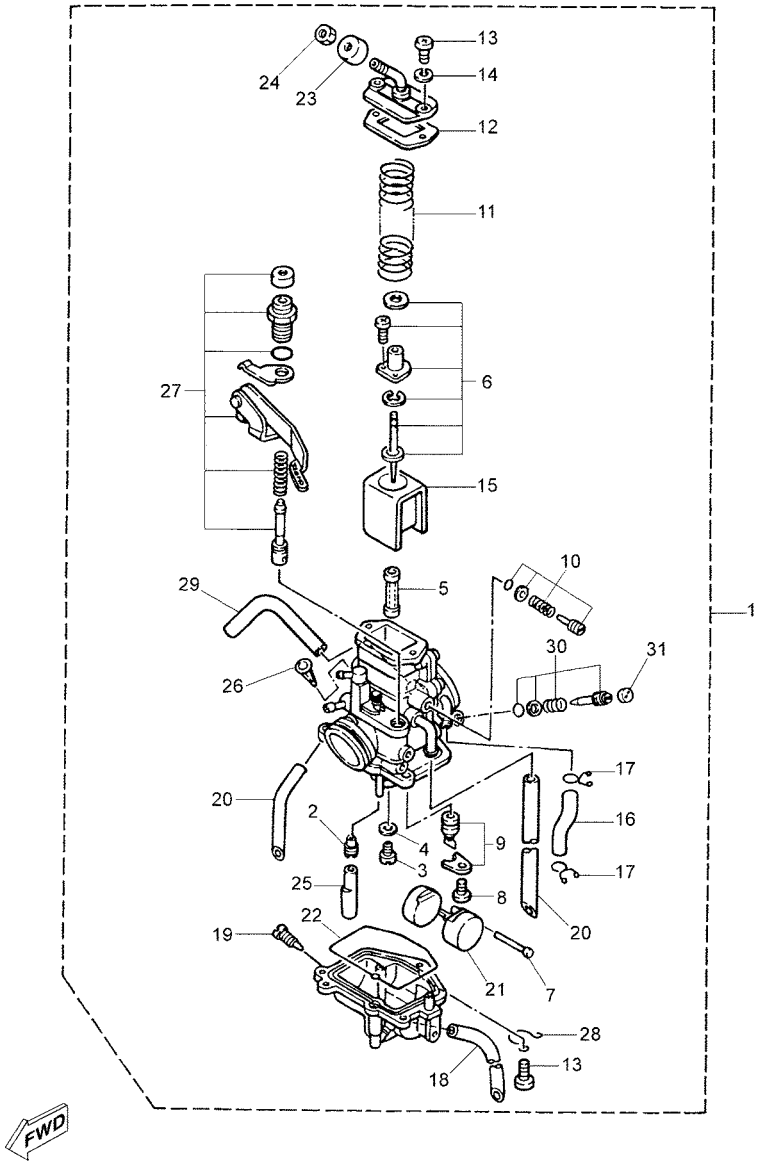


1D01300-C070

## FIG. 7 CARBURETOR

| REF. NO. | PART NO. | DESCRIPTION | 2C81 | | | | | REMARKS |
|---|---|---|---|---|---|---|---|---|
| 28 | 25G–14937–00 | .CLIP | 1 | | | | | |
| 29 | 493–14196–00 | .PIPE, OVER FLOW 1 | 1 | | | | | |
| 30 | 3MB–14104–00 | .AIR SCREW SET | 1 | | | | | |
| 31 | 2RJ–14118–00 | .CAP | 1 | | | | | |

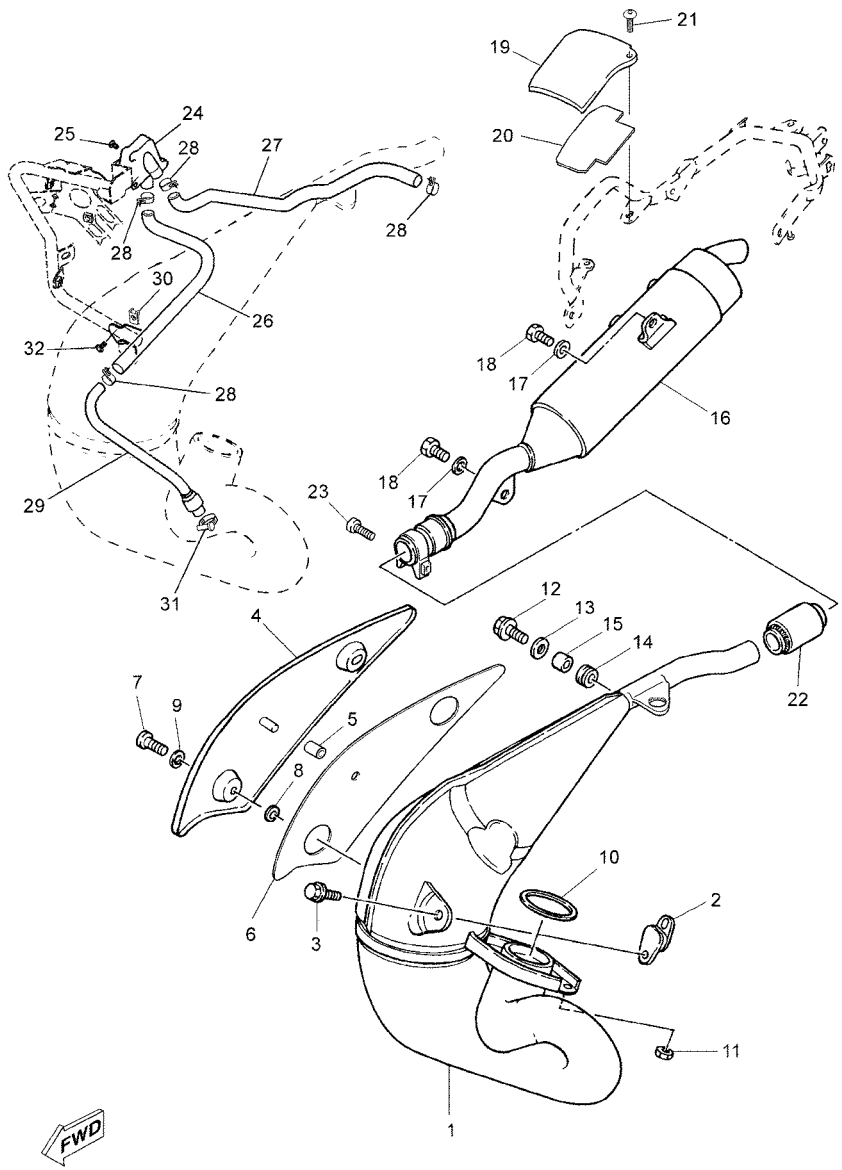


1D01300-C080

## FIG. 8 EXHAUST

| REF. NO. | PART NO. | DESCRIPTION | 2C81 | | | | | REMARKS |
|---|---|---|---|---|---|---|---|---|
| 1 | 1D0–E4610–00 | EXHAUST PIPE ASSY 1 | 1 | | | | | |
| 2 | 565–14771–00 | STAY, MUFFLER 1 | 1 | | | | | |
| 3 | 9580M–06012 | BOLT, FLANGE | 2 | | | | | |
| 4 | 1D0–E4718–00 | PROTECTOR, MUFFLER 1 | 1 | | | | | |
| 5 | 1D0–E4763–00 | SPACER | 1 | | | | | |
| 6 | 1D0–E111B–01 | INSULATOR 1 | 1 | | | | | |
| 7 | 98980–06016 | SCREW, BIND | 2 | | | | | |
| 8 | 90480–12581 | GROMMET | 2 | | | | | |
| 9 | 90387–06023 | COLLAR | 2 | | | | | |
| 10 | 3PA–14613–10 | GASKET, EXHAUST PIPE | 1 | | | | | |
| 11 | 90179–08270 | NUT | 2 | | | | | |
| 12 | 95827–06025 | BOLT, FLANGE | 1 | | | | | |
| 13 | 90201–060A3 | WASHER, PLATE | 1 | | | | | |
| 14 | 90480–18575 | GROMMET | 1 | | | | | |
| 15 | 90387–085G3 | COLLAR | 1 | | | | | |
| 16 | 1D0–E4750–01 | SILENCER ASSY | 1 | | | | | |
| 17 | 90201–08040 | WASHER, PLATE | 2 | | | | | |
| 18 | 90110–08048 | BOLT, HEXAGON SOCKET HEAD | 2 | | | | | |
| 19 | 1D0–E4758–00 | PROTECTOR, SILENCER | 1 | | | | | |
| 20 | 1D0–E112B–01 | INSULATOR 2 | 1 | | | | | |
| 21 | 98980–06012 | SCREW, BIND | 1 | | | | | |
| 22 | 4FU–14714–01 | GASKET, MUFFLER | 1 | | | | | |
| 23 | 95827–08030 | BOLT, FLANGE | 1 | | | | | |
| 24 | 5FC–14803–00 | AIR INDUCTION SYSTEM ASSY | 1 | | | | | |
| 25 | 9580M–06012 | BOLT, FLANGE | 2 | | | | | |
| 26 | 1D0–E4883–00 | HOSE, BEND 3 | 1 | | | | | |
| 27 | 1D0–E4884–00 | HOSE, BEND 4 | 1 | | | | | |

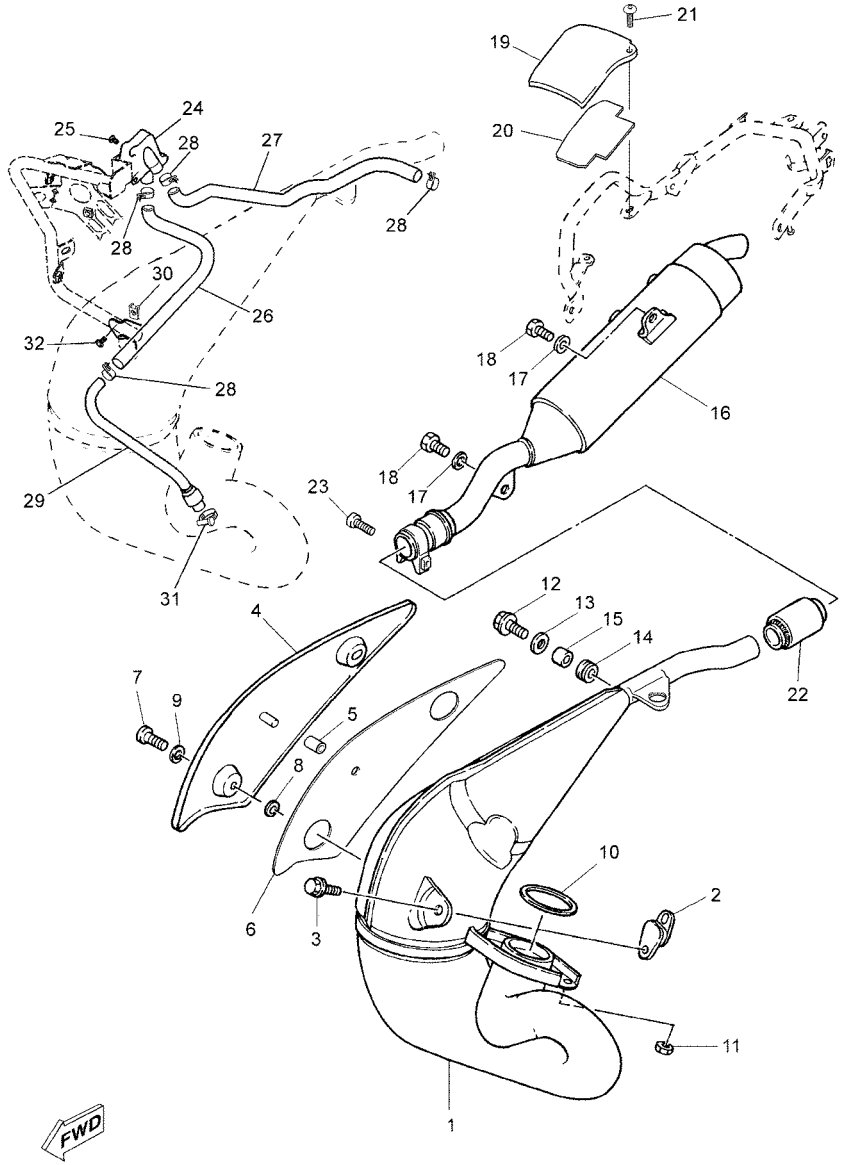


1D01300-C080

## FIG. 8 EXHAUST

| REF. NO. | PART NO. | DESCRIPTION | 2C81 | | | | | REMARKS |
|---|---|---|---|---|---|---|---|---|
| 28 | 90467–16X00 | CLIP | 4 | | | | | |
| 29 | 1D0–E4872–01 | PIPE 2 | 1 | | | | | |
| 30 | 90183–06X01 | NUT, SPRING | 1 | | | | | |
| 31 | 4KM–14714–01 | GASKET, MUFFLER | 1 | | | | | |
| 32 | 9580M–06012 | BOLT, FLANGE | 1 | | | | | |

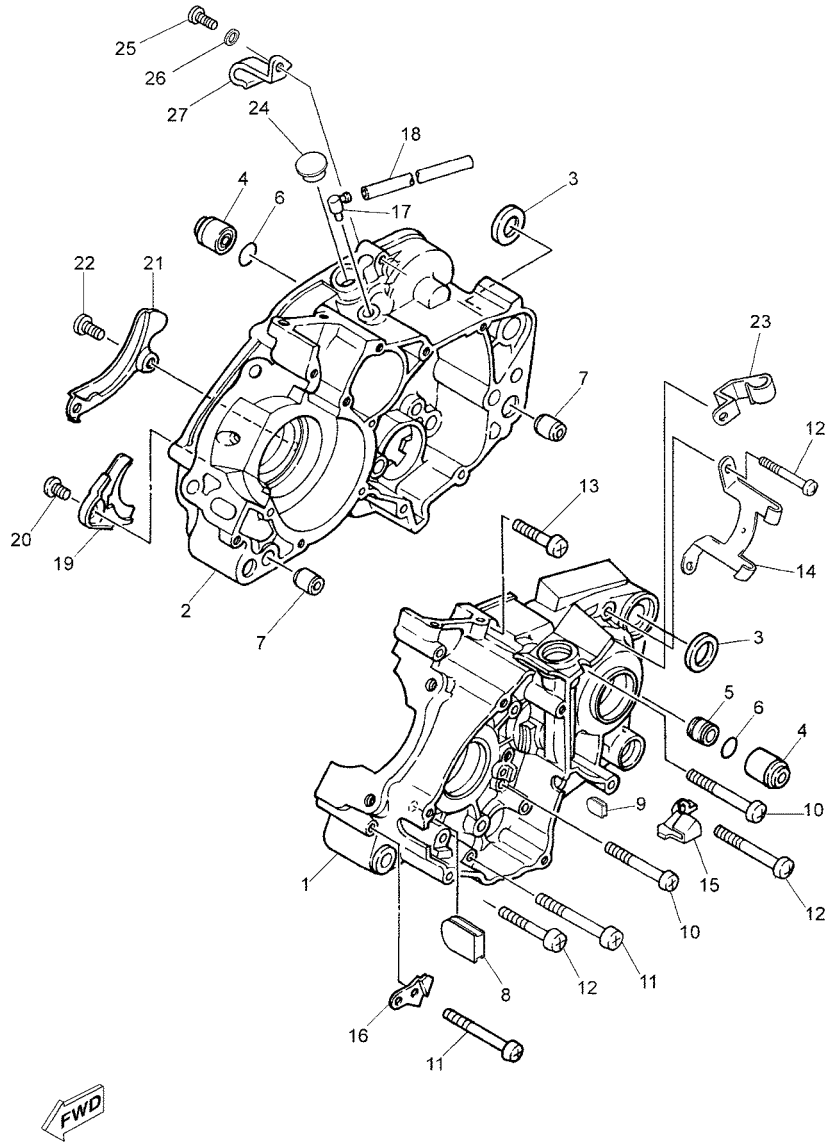


1D01300-C090

## FIG. 9 CRANKCASE

| REF. NO. | PART NO. | DESCRIPTION | 2C81 | | | | | REMARKS |
|---|---|---|---|---|---|---|---|---|
| 1 | 3MB–15111–03 | CRANKCASE 1 | 1 | | | | | |
| 2 | 3BN–15121–04 | CRANKCASE 2 | 1 | | | | | |
| 3 | 90201–170M2 | WASHER, PLATE | 2 | | | | | |
| 4 | 328–15316–00 | DAMPER 1 | 2 | | | | | |
| 5 | 3BN–15317–00 | SPACER, ENGINE MOUNT | 1 | | | | | |
| 6 | 93210–12095 | O-RING | 2 | | | | | |
| 7 | 99530–12016 | PIN, DOWEL | 2 | | | | | |
| 8 | 3MB–15167–01 | PLUG, BLIND 1 | 2 | | | | | |
| 9 | 3MB–15168–01 | PLUG, BLIND 2 | 1 | | | | | |
| 10 | 98507–06060 | SCREW, PAN HEAD | 4 | | | | | |
| 11 | 98507–06065 | SCREW, PAN HEAD | 3 | | | | | |
| 12 | 98507–06050 | SCREW, PAN HEAD | 5 | | | | | |
| 13 | 98507–06040 | SCREW, PAN HEAD | 1 | | | | | |
| 14 | 90462–08189 | CLAMP | 1 | | | | | |
| 15 | 90462–10190 | CLAMP | 1 | | | | | |
| 16 | 3BN–15199–01 | BRACKET | 1 | | | | | |
| 17 | 120–15371–00 | BREATHER | 1 | | | | | |
| 18 | 90446–07349 | HOSE | 1 | | | | | |
| 19 | 37F–15128–00 | HOLDER | 1 | | | | | |
| 20 | 98507–08010 | SCREW, PAN HEAD | 1 | | | | | |
| 21 | 2RH–15492–00 | COVER | 1 | | | | | |
| 22 | 90157–06071 | SCREW, PAN HEAD | 2 | | | | | |
| 23 | 90462–10211 | CLAMP | 1 | | | | | |
| 24 | 90338–16029 | PLUG | 1 | | | | | |
| 25 | 97007–06010 | BOLT | 1 | | | | | |
| 26 | 92907–06600 | WASHER, PLATE | 1 | | | | | |
| 27 | 90465–08122 | CLAMP | 1 | | | | | |

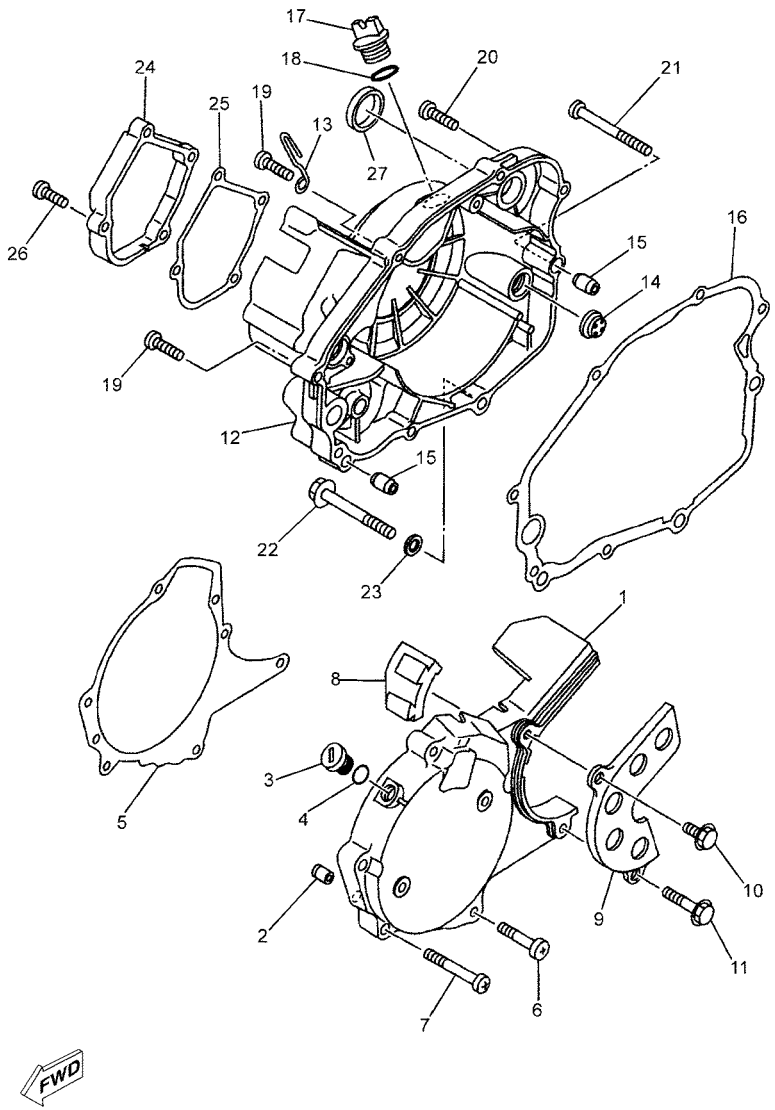


1D01300-C100

## FIG. 10 CRANKCASE COVER 1

| REF. NO. | PART NO. | DESCRIPTION | 2C81 | | | | | REMARKS |
|---|---|---|---|---|---|---|---|---|
| 1 | 3MB–15411–11 | COVER, CRANKCASE 1 | 1 | | | | | |
| 2 | 93606–14081 | PIN, DOWEL | 2 | | | | | |
| 3 | 90340–14068 | PLUG, STRAIGHT SCREW | 1 | | | | | |
| 4 | 93210–14369 | O-RING | 1 | | | | | |
| 5 | 3MB–15455–12 | GASKET 1 | 1 | | | | | |
| 6 | 98507–06035 | SCREW, PAN HEAD | 1 | | | | | |
| 7 | 98507–06060 | SCREW, PAN HEAD | 4 | | | | | |
| 8 | 3MB–15377–01 | GUIDE, INLET | 1 | | | | | |
| 9 | 3MB–15431–10 | COVER, CRANKCASE 3 | 1 | | | | | |
| 10 | 95027–06010 | BOLT, FLANGE | 1 | | | | | |
| 11 | 95027–06035 | BOLT, FLANGE | 1 | | | | | |
| 12 | 3RM–15421–00 | COVER, CRANKCASE 2 | 1 | | | | | |
| 13 | 90465–20396 | CLAMP | 1 | | | | | |
| 14 | 3Y1–15361–00 | GAUGE, LEVEL | 1 | | | | | |
| 15 | 99530–10114 | PIN, DOWEL | 2 | | | | | |
| 16 | 3BN–15451–12 | GASKET, CRANKCASE COVER 1 | 1 | | | | | |
| 17 | 3Y1–15363–00 | PLUG, OIL | 1 | | | | | |
| 18 | 93210–19123 | O-RING | 1 | | | | | |
| 19 | 98507–06030 | SCREW, PAN HEAD | 4 | | | | | |
| 20 | 97880–06030 | SCREW, PAN HEAD | 1 | | | | | |
| 21 | 98507–06040 | SCREW, PAN HEAD | 1 | | | | | |
| 22 | 95807–08080 | BOLT, FLANGE | 1 | | | | | |
| 23 | 90430–08119 | GASKET | 1 | | | | | |
| 24 | 3RM–15416–00 | COVER, OIL PUMP | 1 | | | | | |
| 25 | 3RM–15456–00 | GASKET, OIL PUMP COVER 1 | 1 | | | | | |
| 26 | 9850M–06020 | SCREW, PAN HEAD | 4 | | | | | |
| 27 | 90338–30096 | PLUG | 1 | | | | | |

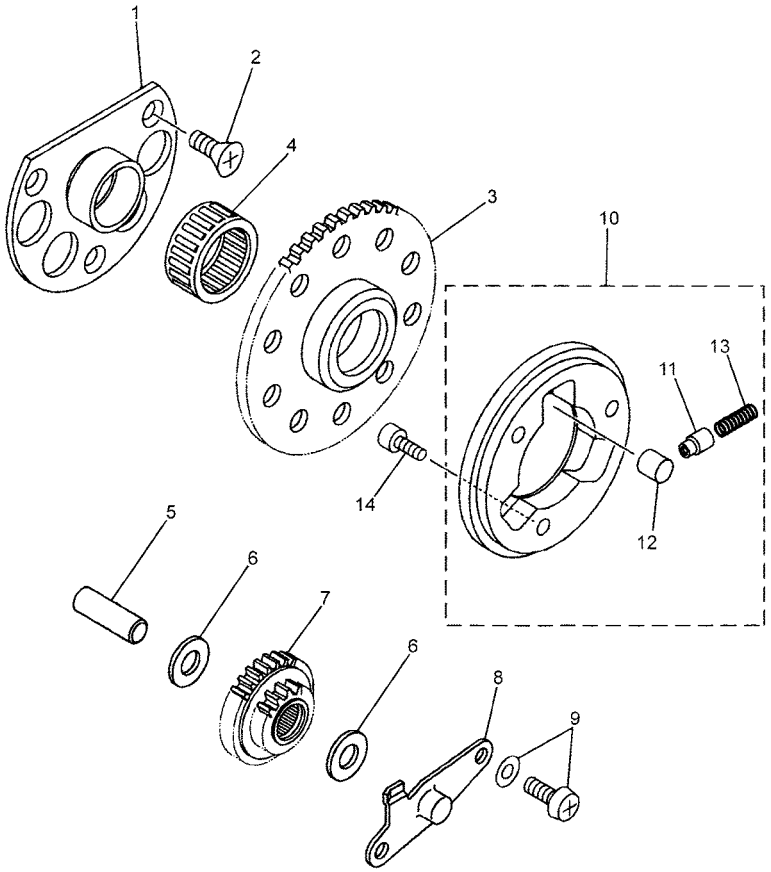

1D01300-C110

## FIG. 11 STARTER

| REF. NO. | PART NO. | DESCRIPTION | 2C81 | | | | | REMARKS |
|---|---|---|---|---|---|---|---|---|
| 1 | 3MB–15544–00 | STAY 1 | 1 | | | | | |
| 2 | 90151–06041 | SCREW, COUNTERSUNK | 3 | | | | | |
| 3 | 3AY–15524–00 | WHEEL, STARTER | 1 | | | | | |
| 4 | 93310–230B1 | BEARING | 1 | | | | | |
| 5 | 50M–13342–00 | SHAFT, IDLE GEAR | 1 | | | | | |
| 6 | 90201–08092 | WASHER, PLATE | 2 | | | | | |
| 7 | 50W–15650–00 | IDLE GEAR ASSY (48T/14T) | 1 | | | | | |
| 8 | 3MB–15532–00 | PLATE, IDLE GEAR | 1 | | | | | |
| 9 | 90159–06017 | SCREW, WITH WASHER | 2 | | | | | |
| 10 | 3AY–15580–01 | STARTER CLUTCH OUTER ASSY | 1 | | | | | |
| 11 | 3AY–15583–00 | .CAP, STARTER CLUTCH SPRING | 3 | | | | | |
| 12 | 93610–10174 | .PIN, DOWEL | 3 | | | | | |
| 13 | 90501–02639 | .SPRING, COMPRESSION | 3 | | | | | |
| 14 | 91317–06012 | BOLT | 3 | | | | | |

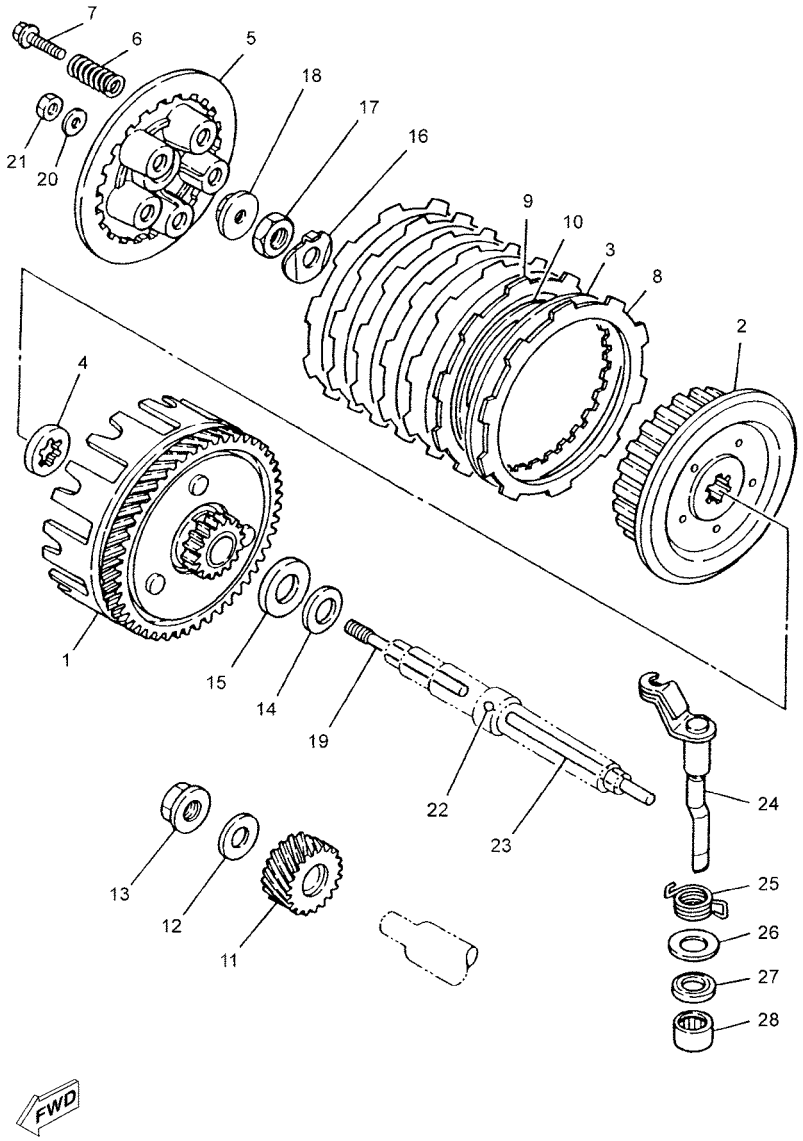


1D01300-C120

## FIG. 12 CLUTCH

| REF. NO. | PART NO. | DESCRIPTION | 2C81 | | | | | REMARKS |
|---|---|---|---|---|---|---|---|---|
| 1 | 3BN–16150–01 | PRIMARY DRIVEN GEAR COMP. | 1 | | | | | |
| 2 | 37F–16371–01 | BOSS, CLUTCH | 1 | | | | | |
| 3 | 1V1–16324–00 | PLATE, CLUTCH 1 | 6 | | | | | |
| 4 | 2TV–16154–00 | PLATE, THRUST 1 | 1 | | | | | |
| 5 | 37F–16351–00 | PLATE, PRESSURE 1 | 1 | | | | | |
| 6 | 90501–20644 | SPRING, COMPRESSION | 5 | | | | | |
| 7 | 90119–05001 | BOLT, WITH WASHER | 5 | | | | | |
| 8 | 21V–16321–00 | PLATE, FRICTION | 6 | | | | | |
| 9 | 1HX–16331–00 | PLATE, FRICTION 2 | 1 | | | | | |
| 10 | 3BN–16383–00 | SPRING, CLUTCH BOSS | 1 | | | | | |
| 11 | 4FU–16111–00 | GEAR, PRIMARY DRIVE | 1 | | | | | |
| 12 | 90201–120E8 | WASHER, PLATE | 1 | | | | | |
| 13 | 90179–12659 | NUT | 1 | | | | | |
| 14 | 90208–18046 | WASHER, CONICAL SPRING | 1 | | | | | |
| 15 | 90201–180P2 | WASHER, PLATE | 1 | | | | | |
| 16 | 90215–12271 | WASHER, LOCK | 1 | | | | | |
| 17 | 90170–12370 | NUT | 1 | | | | | |
| 18 | 1W1–16358–01 | PLATE, PUSH | 1 | | | | | |
| 19 | 1W1–16356–02 | ROD, PUSH 1 | 1 | | | | | |
| 20 | 92907–06200 | WASHER | 1 | | | | | |
| 21 | 95307–06600 | NUT | 1 | | | | | |
| 22 | 93503–16003 | BALL | 1 | | | | | |
| 23 | 3R1–16357–00 | ROD, PUSH 2 | 1 | | | | | |
| 24 | 3BN–16380–00 | PUSH LEVER ASSY | 1 | | | | | |
| 25 | 90508–18765 | SPRING, TORSION | 1 | | | | | |
| 26 | 90201–14217 | WASHER, PLATE | 1 | | | | | |
| 27 | 93104–14004 | OIL SEAL | 1 | | | | | |

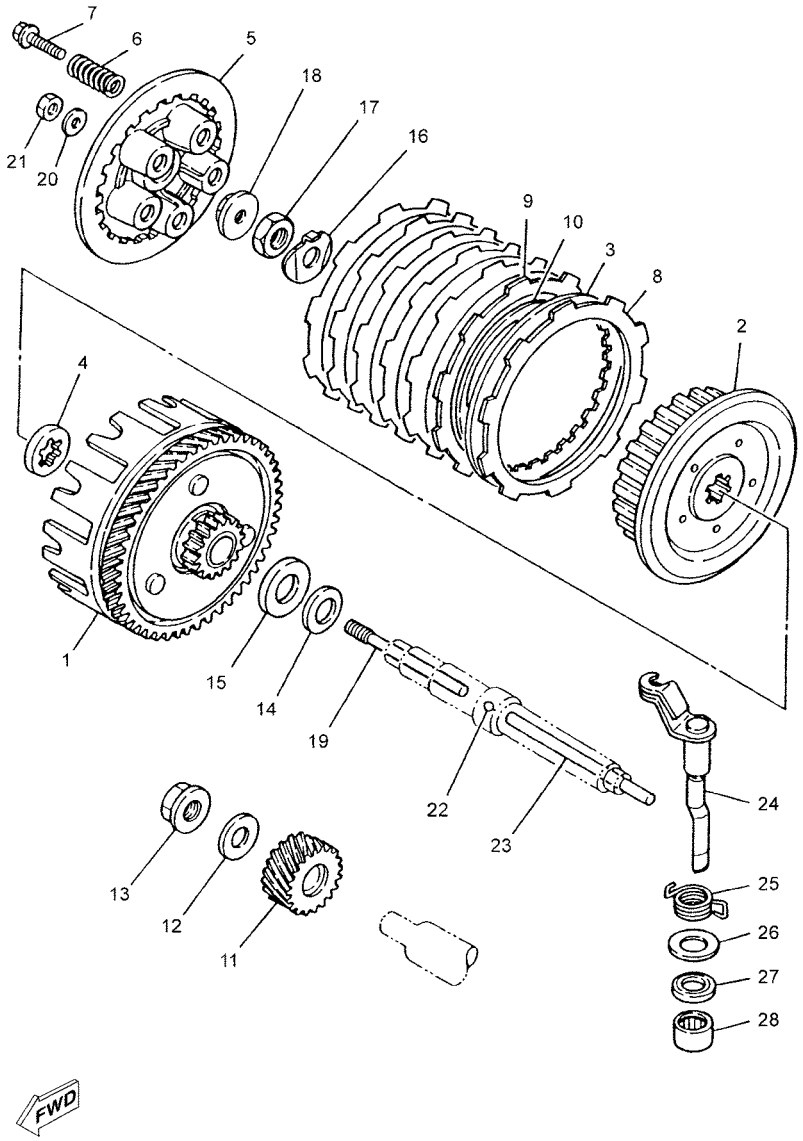


1D01300-C120

## FIG. 12 CLUTCH

| REF. NO. | PART NO. | DESCRIPTION | 2C81 | | | | | REMARKS |
|---|---|---|---|---|---|---|---|---|
| 28 | 93315–21429 | BEARING | 1 | | | | | |

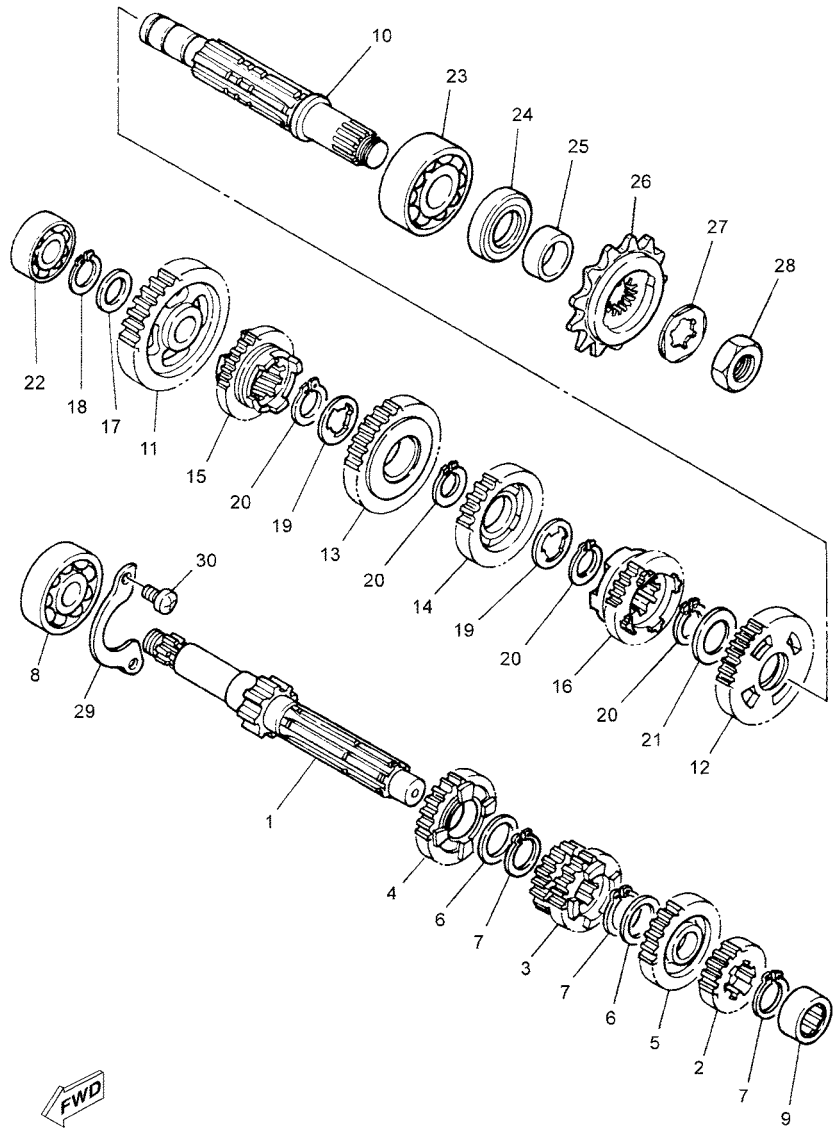


1D01300-C130

## FIG. 13 TRANSMISSION

| REF. NO. | PART NO. | DESCRIPTION | 2C81 | | | | | REMARKS |
|---|---|---|---|---|---|---|---|---|
| 1 | 3MB–17411–01 | AXLE, MAIN (12T) | 1 | | | | | |
| 2 | 3BN–17121–00 | GEAR, 2ND PINION (16T) | 1 | | | | | |
| 3 | 3BN–17131–01 | GEAR, 3RD PINION (17T/21T) | 1 | | | | | |
| 4 | 3BN–17151–01 | GEAR, 5TH PINION (23T) | 1 | | | | | |
| 5 | 3MB–17161–00 | GEAR, 6TH PINION (22T) | 1 | | | | | |
| 6 | 90201–20266 | WASHER, PLATE (T=1.0) | 2 | | | | | |
| 7 | 93410–20038 | CIRCLIP | 3 | | | | | |
| 8 | 93306–20431 | BEARING | 1 | | | | | |
| 9 | 93311–31567 | BEARING | 1 | | | | | |
| 10 | 3BN–17421–00 | AXLE, DRIVE | 1 | | | | | |
| 11 | 2TV–17211–01 | GEAR, 1ST WHEEL (34T) | 1 | | | | | |
| 12 | 3BN–17221–00 | GEAR, 2ND WHEEL (30T) | 1 | | | | | |
| 13 | 3BN–17231–01 | GEAR, 3RD WHEEL (24T) | 1 | | | | | |
| 14 | 3XP–17241–00 | GEAR, 4TH WHEEL (24T) | 1 | | | | | |
| 15 | 3BN–17251–02 | GEAR, 5TH WHEEL (22T) | 1 | | | | | |
| 16 | 3XP–17261–00 | GEAR, 6TH WHEEL (18T) | 1 | | | | | |
| 17 | 90201–15700 | WASHER, PLATE | 1 | | | | | |
| 18 | 99009–15400 | CIRCLIP | 1 | | | | | |
| 19 | 90209–18135 | WASHER | 2 | | | | | |
| 20 | 93410–22039 | CIRCLIP | 4 | | | | | |
| 21 | 90201–22555 | WASHER, PLATE | 1 | | | | | |
| 22 | 93306–20201 | BEARING | 1 | | | | | |
| 23 | 93306–30438 | BEARING | 1 | | | | | |
| 24 | 93102–26042 | OIL SEAL | 1 | | | | | |
| 25 | 90387–205U0 | COLLAR | 1 | | | | | |
| 26 | 3RM–17460–00 | SPROCKET, DRIVE (16T) | 1 | | | | | |
| 27 | 90215–20283 | WASHER, LOCK | 1 | | | | | |

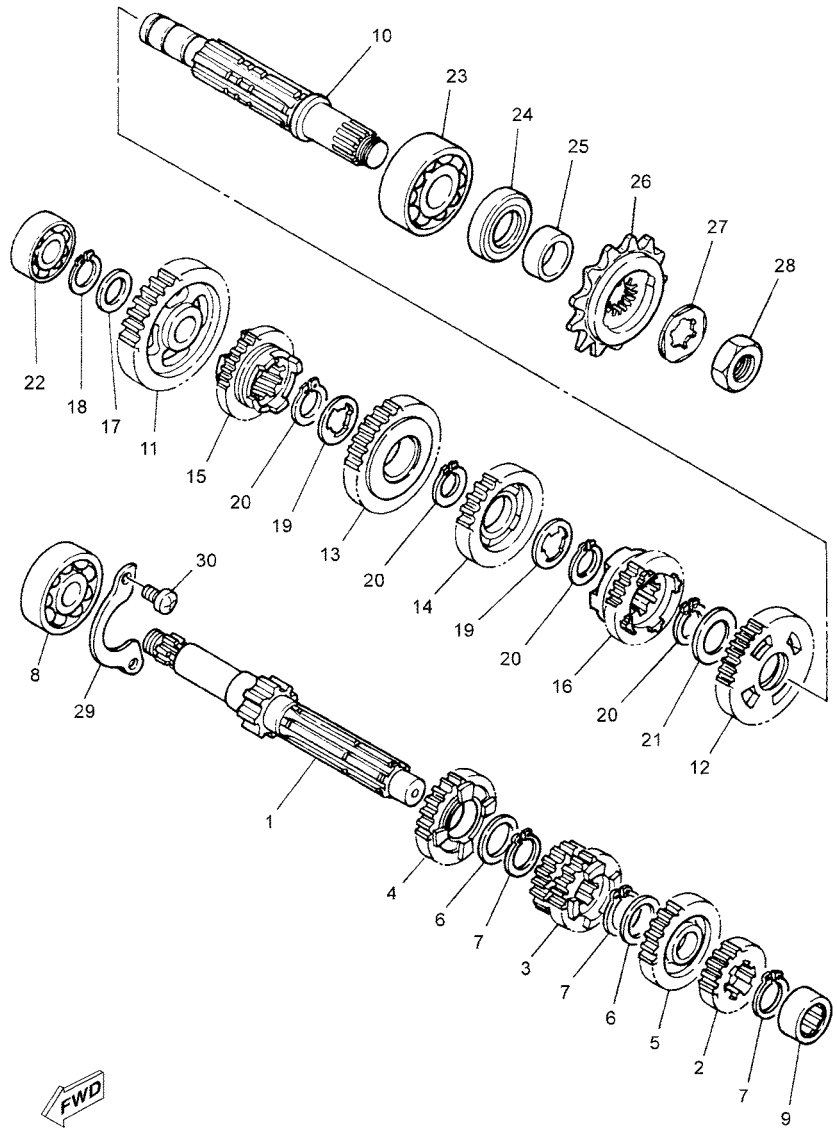


1D01300-C130

## FIG. 13 TRANSMISSION

| REF. NO. | PART NO. | DESCRIPTION | 2C81 | | | | | REMARKS |
|---|---|---|---|---|---|---|---|---|
| 28 | 90179–16226 | NUT | 1 | | | | | |
| 29 | 55K–17471–00 | PLATE, COVER | 1 | | | | | |
| 30 | 90157–06071 | SCREW, PAN HEAD | 2 | | | | | |

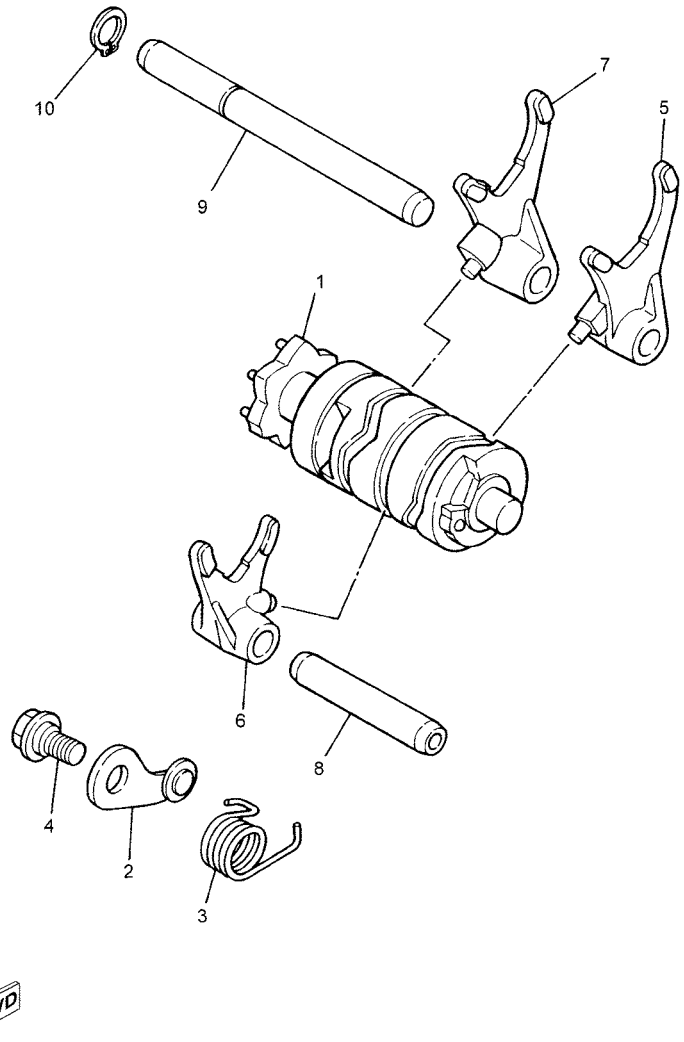


1D01300-C140

## FIG. 14 SHIFT CAM & FORK

| REF. NO. | PART NO. | DESCRIPTION | 2C81 | | | | | REMARKS |
|---|---|---|---|---|---|---|---|---|
| 1 | 3XP–18540–00 | SHIFT CAM ASSY | 1 | | | | | |
| 2 | 3BN–18140–00 | STOPPER LEVER ASSY | 1 | | | | | |
| 3 | 90508–26561 | SPRING, TORSION | 1 | | | | | |
| 4 | 90109–063F7 | BOLT | 1 | | | | | |
| 5 | 55K–18511–01 | FORK, SHIFT 1 | 1 | | | | | |
| 6 | 2RH–18512–00 | FORK, SHIFT 2 | 1 | | | | | |
| 7 | 55K–18513–00 | FORK, SHIFT 3 | 1 | | | | | |
| 8 | 55K–18531–00 | BAR, SHIFT FORK GUIDE 1 | 1 | | | | | |
| 9 | 3BN–18535–00 | BAR, SHIFT FORK GUIDE 2 | 1 | | | | | |
| 10 | 99009–10400 | CIRCLIP | 1 | | | | | |

## FIG. 15 SHIFT SHAFT

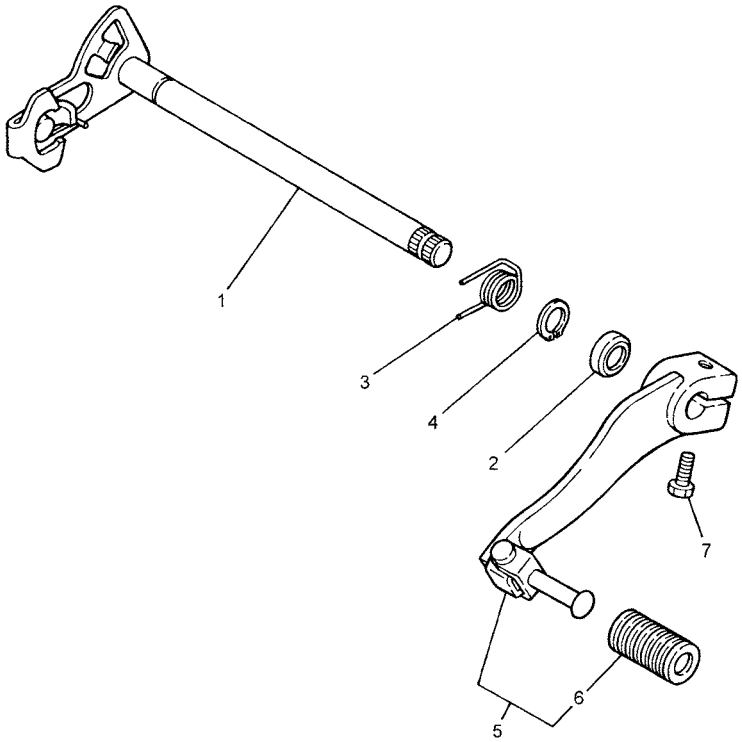

1D01300-C150

| REF. NO. | PART NO. | DESCRIPTION | 2C81 | | | | | REMARKS |
|---|---|---|---|---|---|---|---|---|
| 1 | 10W–18101–03 | SHIFT SHAFT ASSY | 1 | | | | | |
| 2 | 93101–12173 | OIL SEAL | 1 | | | | | |
| 3 | 90508–32553 | SPRING, TORSION | 1 | | | | | |
| 4 | 99001–10600 | CIRCLIP | 1 | | | | | |
| 5 | 3MB–18110–00 | SHIFT PEDAL ASSY | 1 | | | | | |
| 6 | 1W6–18113–00 | .COVER, SHIFT PEDAL | 1 | | | | | |
| 7 | 97017–06020 | BOLT | 1 | | | | | |

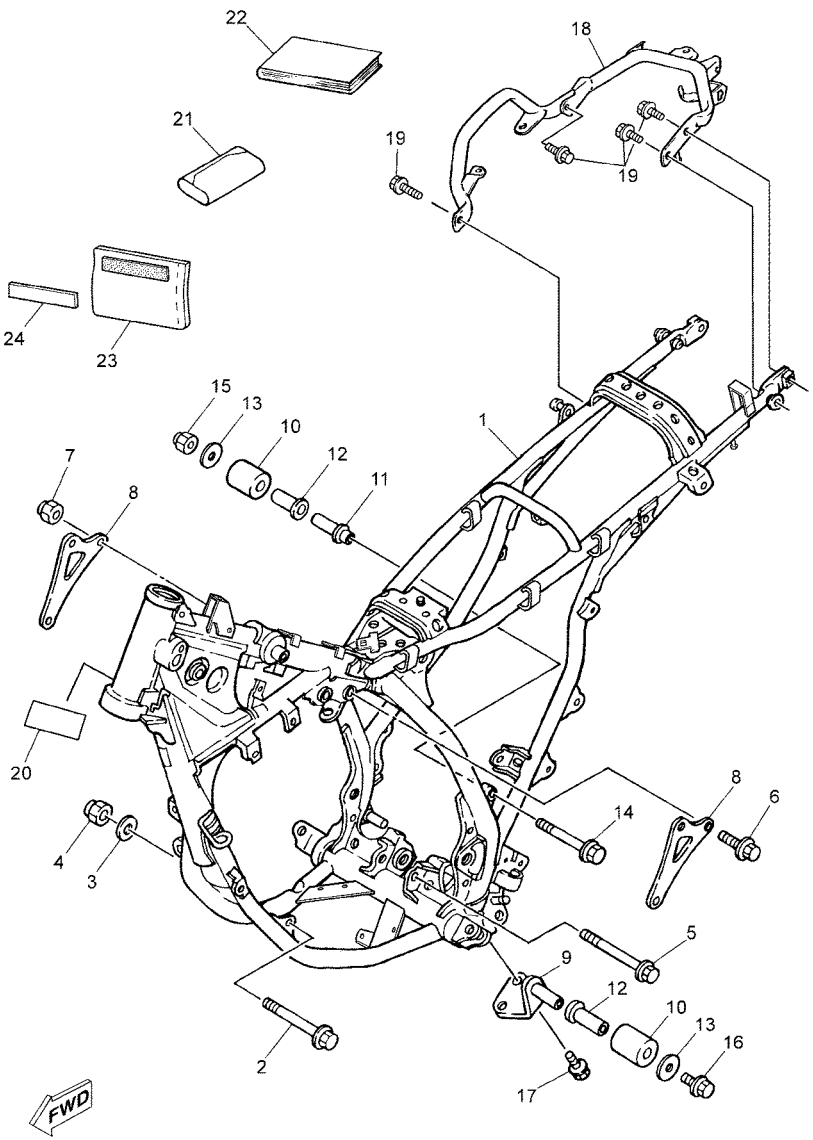


1D01300-C160

## FIG. 16 FRAME

| REF. NO. | PART NO. | DESCRIPTION | 2C81 | | | | | REMARKS |
|---|---|---|---|---|---|---|---|---|
| 1 | 1D0–F1110–00–98 | FRAME COMP. | 1 | | | | | LGB |
| 2 | 90105–10111 | BOLT, FLANGE | 1 | | | | | |
| 3 | 90201–100E9 | WASHER, PLATE | 1 | | | | | |
| 4 | 90185–10060 | NUT, SELF-LOCKING | 1 | | | | | |
| 5 | 90105–08391 | BOLT, FLANGE | 1 | | | | | |
| 6 | 95817–08045 | BOLT, FLANGE | 3 | | | | | |
| 7 | 95607–08200 | NUT, SELF-LOCKING | 3 | | | | | |
| 8 | 3BN–21425–00 | BRACKET, REAR UPPER 1 | 2 | | | | | |
| 9 | 3BN–2141E–00 | BRACKET 2 | 1 | | | | | |
| 10 | 30X–22178–00 | TENSIONER | 2 | | | | | |
| 11 | 2K7–2148A–00 | SHAFT | 1 | | | | | |
| 12 | 10V–22184–00 | BUSH | 2 | | | | | |
| 13 | 90201–08753 | WASHER, PLATE | 2 | | | | | |
| 14 | 95807–08050 | BOLT, FLANGE | 1 | | | | | |
| 15 | 90185–08143 | NUT, SELF-LOCKING | 1 | | | | | |
| 16 | 95027–08012 | BOLT, FLANGE | 1 | | | | | |
| 17 | 95827–06012 | BOLT, FLANGE | 2 | | | | | |
| 18 | 1D0–F1190–01 | REAR FRAME COMP. | 1 | | | | | |
| 19 | 95817–06012 | BOLT, FLANGE | 4 | | | | | |
| 20 | 1D0–F118N–00 | LABEL | 1 | | | | | |
| 21 | 1D0–28100–00 | TOOL KIT | 1 | | | | | |
| 22 | 2C8–F8199–E0 | MANUAL,OWNER'S | 1 | | | | | |
| | 2C8–F8199–F0 | MANUAL,OWNER'S | 1 | | | | | |
| | 2C8–F8199–G0 | MANUAL,OWNER'S | 1 | | | | | |
| | 2C8–F8199–H0 | MANUAL,OWNER'S | 1 | | | | | |
| | 2C8–F8199–S0 | MANUAL,OWNER'S | 1 | | | | | |
| | 2C8–F8199–P0 | MANUAL,OWNER'S | 1 | | | | | |

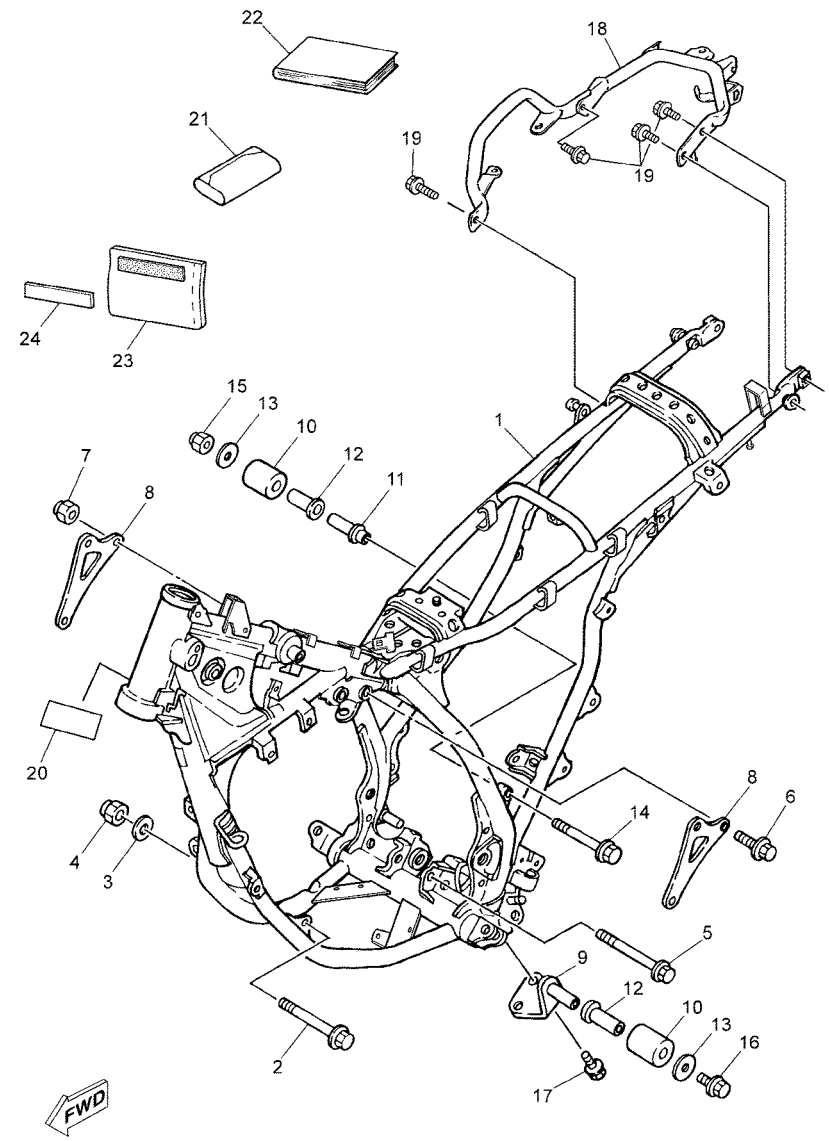


1D01300-C160

## FIG. 16 FRAME

| REF. NO. | PART NO. | DESCRIPTION | 2C81 | | | | | REMARKS |
|---|---|---|---|---|---|---|---|---|
| 23 | 4TP–28186–00 | POUCH | 1 | | | | | |
| 24 | 4KG–2814E–10 | HOOK | 1 | | | | | |

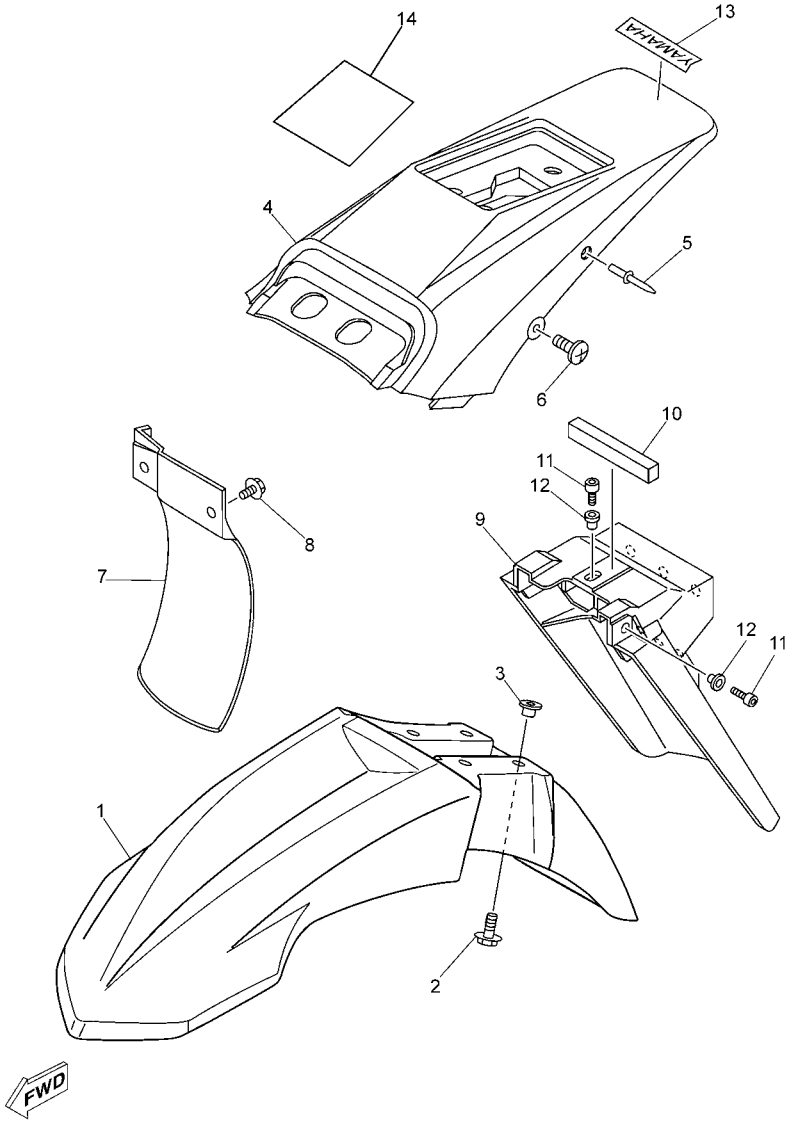


2C81300-C170

## FIG. 17 FENDER

| REF. NO. | PART NO. | DESCRIPTION | 2C81 | | | | | REMARKS |
|---|---|---|---|---|---|---|---|---|
| 1 | 2C8–F1511–00 | FENDER, FRONT | 1 | | | | | |
| 2 | 90119–06681 | BOLT, WITH WASHER | 4 | | | | | |
| 3 | 90387–062V8 | COLLAR | 4 | | | | | |
| 4 | 1D0–F1611–10 | FENDER, REAR | 1 | | | | | |
| 5 | 90269–07071 | RIVET | 2 | | | | | |
| 6 | 90150–06021 | SCREW, ROUND HEAD | 2 | | | | | |
| 7 | 3BN–21642–00 | GUARD, FLAP | 1 | | | | | |
| 8 | 90119–06194 | BOLT, WITH WASHER | 2 | | | | | |
| 9 | 4PX–21685–00 | BRACKET, LICENSE | 1 | | | | | |
| 10 | 1D0–F1639–00 | DAMPER 2 | 1 | | | | | |
| 11 | 9131M–06016 | BOLT | 3 | | | | | |
| 12 | 90560–06244 | SPACER | 3 | | | | | |
| 13 | 1D0–F153A–10 | EMBLEM, YAMAHA | 1 | | | | | |
| 14 | 5DS–F415E–00 | LABEL, CAUTION | 1 | | | | | |

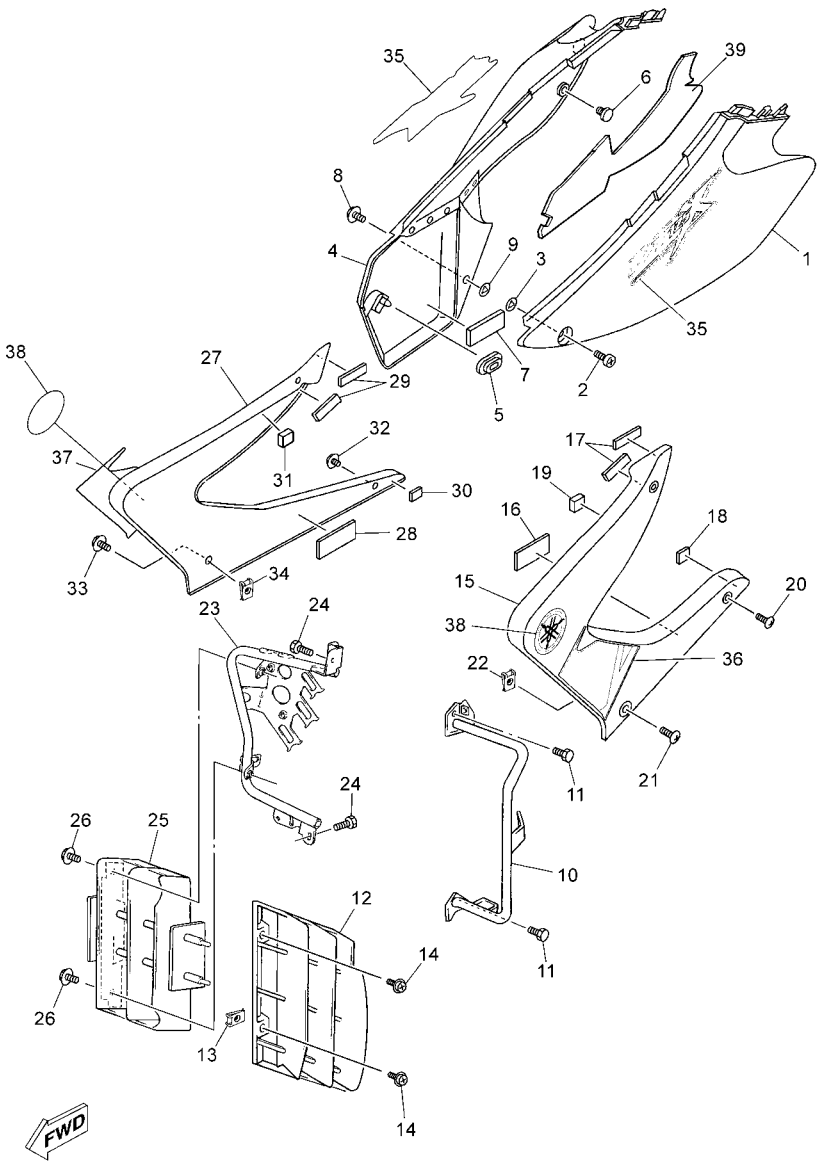


2C81300-C180

## FIG. 18 SIDE COVER

| REF. NO. | PART NO. | DESCRIPTION | 2C81 | | | | | REMARKS |
|---|---|---|---|---|---|---|---|---|
| 1 | 1D0–F1711–10 | COVER, SIDE 1 | 1 | | | | | |
| 2 | 90149–06305 | SCREW | 1 | | | | | |
| 3 | 4U5–2176E–00 | PLATE | 1 | | | | | |
| 4 | 1D0–F1721–10 | COVER, SIDE 2 | 1 | | | | | |
| 5 | 90480–01141 | GROMMET | 1 | | | | | |
| 6 | 461–21717–00 | DAMPER, BATTERY BOX | 2 | | | | | |
| 7 | 1D0–F1746–00 | DAMPER | 1 | | | | | |
| 8 | 90149–06223 | SCREW | 1 | | | | | |
| 9 | 4U5–2176E–00 | PLATE | 1 | | | | | |
| 10 | 1D0–F172K–00 | BRACKET 1 | 1 | | | | | |
| 11 | 9580M–06010 | BOLT, FLANGE | 2 | | | | | |
| 12 | 3BN–2172A–00 | PANEL 1 | 1 | | | | | |
| 13 | 22W–21791–00 | NUT | 2 | | | | | |
| 14 | 90159–05163 | SCREW, WITH WASHER | 2 | | | | | |
| 15 | 1D0–F137W–00 | SCOOP, AIR 1 | 1 | | | | | DPBS1 |
| | 1D0–F137W–10 | SCOOP, AIR 1 | 1 | | | | | YB |
| 16 | 1D0–F174X–00 | DAMPER | 1 | | | | | |
| 17 | 1D0–F1747–00 | DAMPER | 2 | | | | | |
| 18 | 1D0–F174Y–00 | DAMPER | 1 | | | | | |
| 19 | 1D0–F1747–10 | DAMPER | 1 | | | | | |
| 20 | 90154–05074 | SCREW, BINDING | 2 | | | | | |
| 21 | 90150–06021 | SCREW, ROUND HEAD | 1 | | | | | |
| 22 | 90183–06053 | NUT, SPRING | 1 | | | | | |
| 23 | 1D0–F172L–00 | BRACKET 2 | 1 | | | | | |
| 24 | 95807–06010 | BOLT, FLANGE | 2 | | | | | |
| 25 | 1LX–2172F–01 | PANEL 2 | 1 | | | | | |
| 26 | 90159–05083 | SCREW, WITH WASHER | 2 | | | | | |

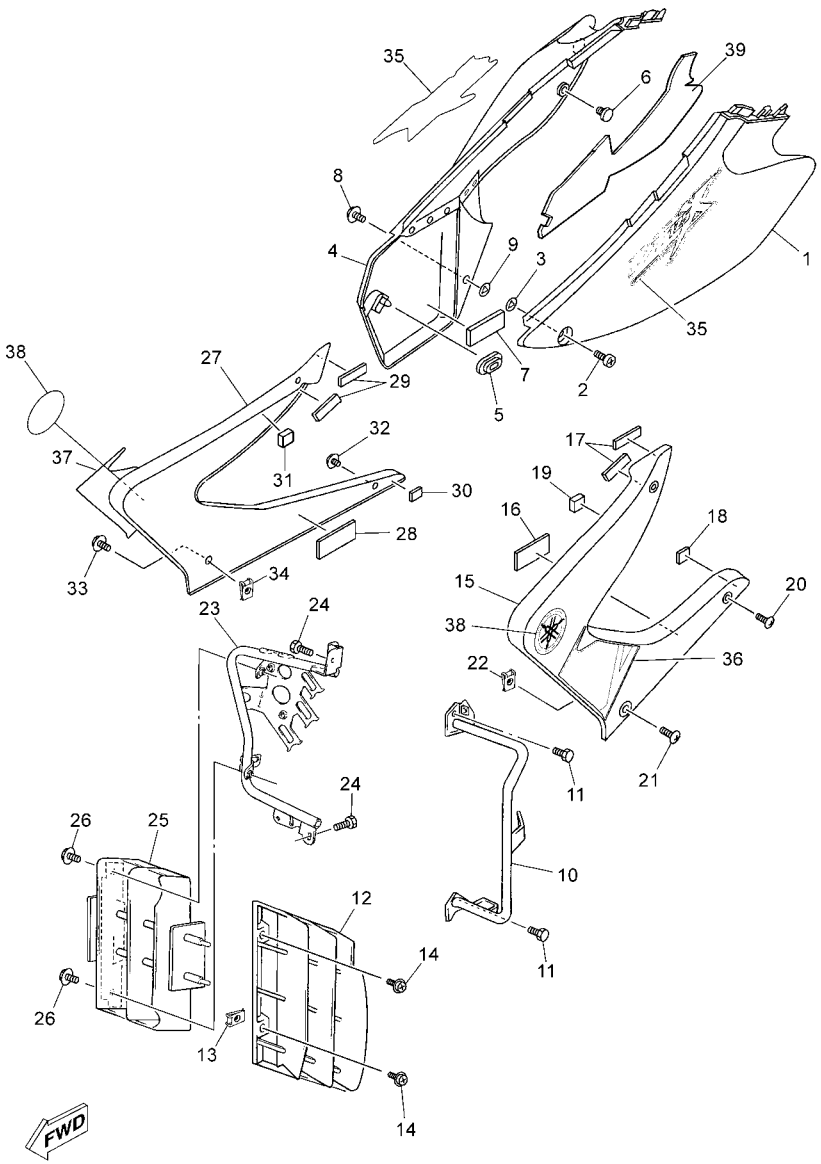


2C81300-C180

## FIG. 18 SIDE COVER

| REF. NO. | PART NO. | DESCRIPTION | 2C81 | | | | | REMARKS |
|---|---|---|---|---|---|---|---|---|
| 27 | 1D0–F137X–00 | SCOOP, AIR 2 | 1 | | | | | DPBS1 |
| | 1D0–F137X–10 | SCOOP, AIR 2 | 1 | | | | | YB |
| 28 | 1D0–F174X–00 | DAMPER | 1 | | | | | |
| 29 | 1D0–F1747–00 | DAMPER | 2 | | | | | |
| 30 | 1D0–F174Y–00 | DAMPER | 1 | | | | | |
| 31 | 1D0–F1747–10 | DAMPER | 1 | | | | | |
| 32 | 90154–05074 | SCREW, BINDING | 2 | | | | | |
| 33 | 90150–06021 | SCREW, ROUND HEAD | 1 | | | | | |
| 34 | 90183–06053 | NUT, SPRING | 1 | | | | | |
| 35 | 2C8–F173E–00 | GRAPHIC, 1 | 2 | | | | | UR DPBS1 |
| | 2C8–F173E–10 | GRAPHIC, 1 | 2 | | | | | UR YB |
| 36 | 2C8–F174G–00 | GRAPHIC, 3 | 1 | | | | | UR DPBS1 |
| | 2C8–F174G–10 | GRAPHIC, 3 | 1 | | | | | UR YB |
| 37 | 2C8–F174H–00 | GRAPHIC, 4 | 1 | | | | | UR DPBS1 |
| | 2C8–F174H–10 | GRAPHIC, 4 | 1 | | | | | UR YB |
| 38 | 1D0–F175C–00 | TUNING FORK MARK | 2 | | | | | |
| 39 | 1D0–F174A–01 | INSULATOR, SIDE COVER | 1 | | | | | |

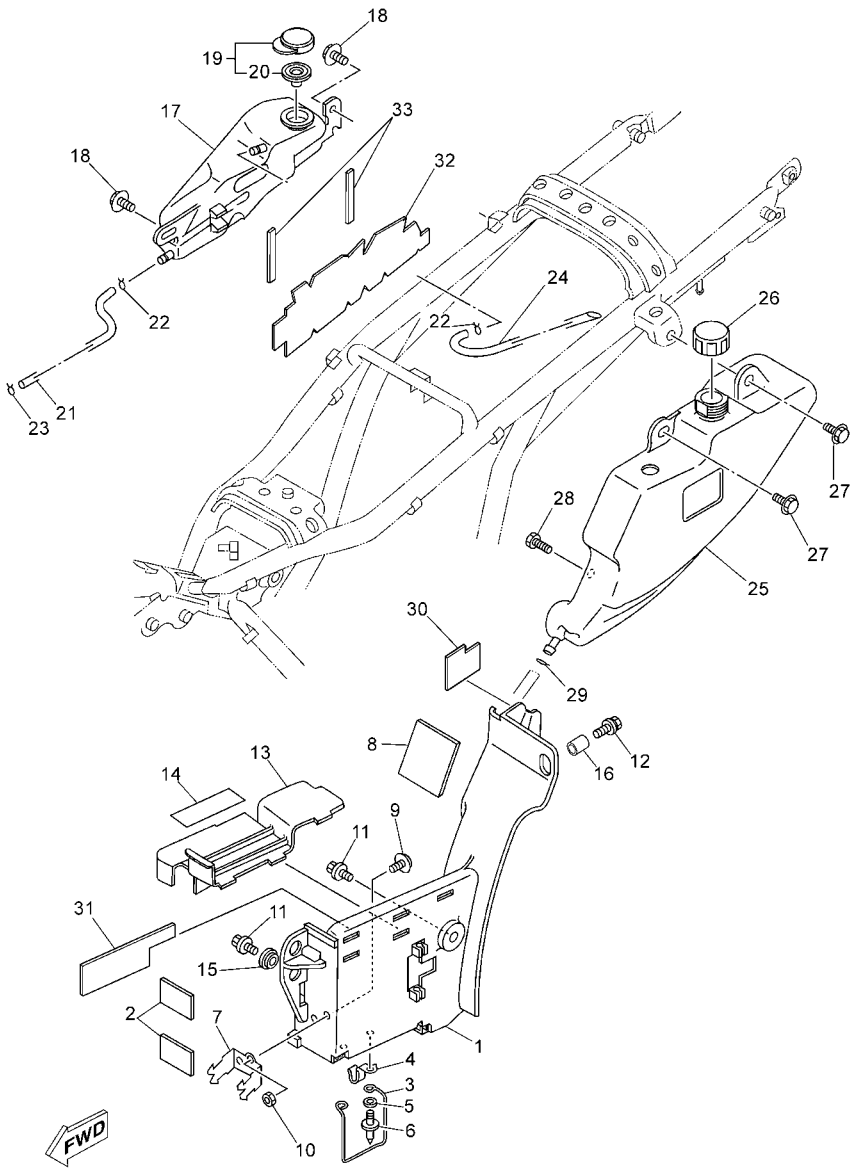


2C81300-C190

## FIG. 19 OIL TANK

| REF. NO. | PART NO. | DESCRIPTION | 2C81 | | | | | REMARKS |
|---|---|---|---|---|---|---|---|---|
| 1 | 1D0–2177A–00 | BOX | 1 | | | | | |
| 2 | 1D0–F1746–10 | DAMPER | 2 | | | | | |
| 3 | 3ET–21339–00 | GUIDE, WIRE | 1 | | | | | |
| 4 | 90465–08122 | CLAMP | 1 | | | | | |
| 5 | 90201–044H9 | WASHER, PLATE | 2 | | | | | |
| 6 | 90267–40191 | RIVET, BLIND | 2 | | | | | |
| 7 | 4TP–2117J–00 | LINING, SIDE COVER 1 | 1 | | | | | |
| 8 | 4TP–2174X–00 | DAMPER | 1 | | | | | |
| 9 | 90159–04053 | SCREW, WITH WASHER | 2 | | | | | |
| 10 | 95607–04100 | NUT, U | 2 | | | | | |
| 11 | 90119–06056 | BOLT, WITH WASHER | 2 | | | | | |
| 12 | 90119–06118 | BOLT, WITH WASHER | 1 | | | | | |
| 13 | 4TP–2176E–00 | PLATE | 1 | | | | | |
| 14 | 1D0–H253E–01 | INSULATOR 1 | 1 | | | | | |
| 15 | 90560–08066 | SPACER | 1 | | | | | |
| 16 | 90387–082J1 | COLLAR | 1 | | | | | |
| 17 | 4TP–21871–00 | TANK, RECOVERY | 1 | | | | | |
| 18 | 90119–06205 | BOLT, WITH WASHER | 2 | | | | | |
| 19 | 1AA–21815–00 | CAP | 1 | | | | | |
| 20 | 1AA–21874–00 | .GASKET | 1 | | | | | |
| 21 | 1D0–F1816–00 | PIPE 1 | 1 | | | | | |
| 22 | 90467–08003 | CLIP | 2 | | | | | |
| 23 | 90467–11X01 | CLIP | 1 | | | | | |
| 24 | 4TP–21877–00 | PIPE, OVERFLOW | 1 | | | | | |
| 25 | 4TP–21751–01 | TANK, OIL | 1 | | | | | |
| 26 | 3BN–21770–01 | OIL TANK CAP ASSY | 1 | | | | | |
| 27 | 90119–06205 | BOLT, WITH WASHER | 2 | | | | | |

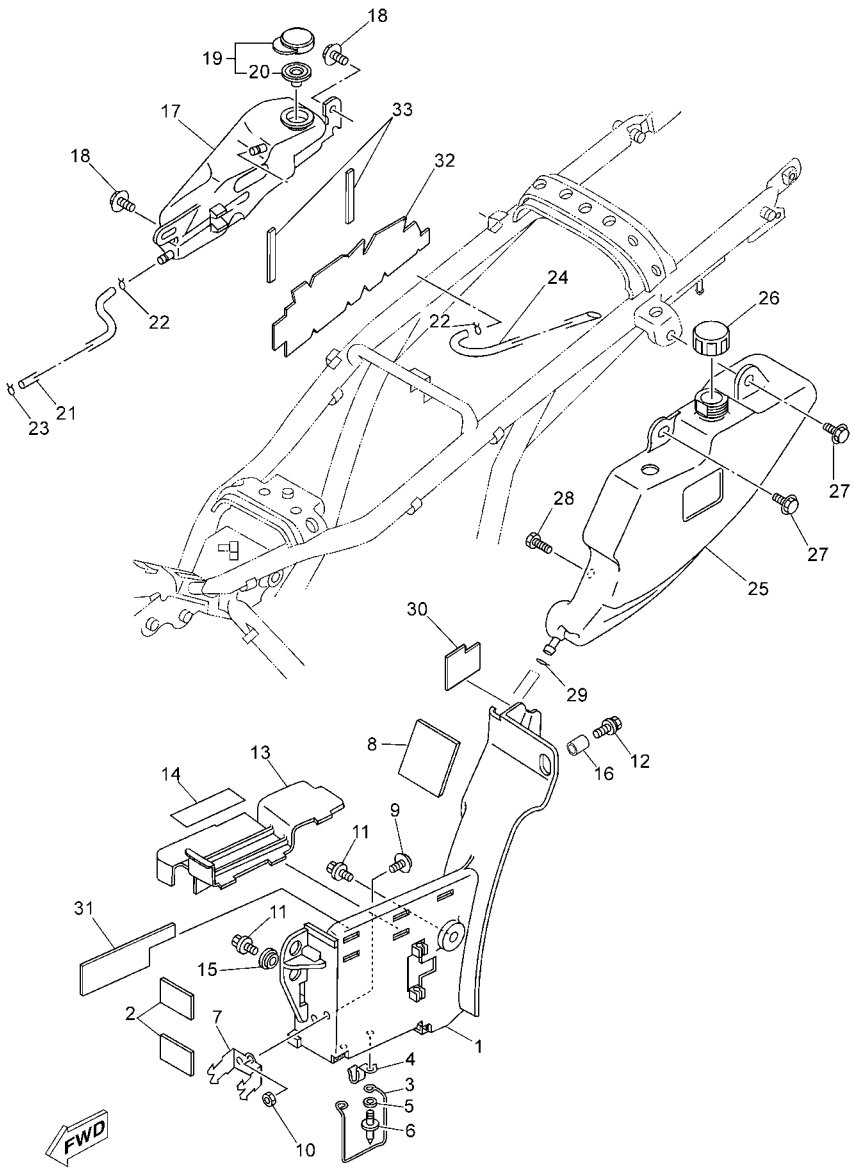


2C81300-C190

## FIG. 19 OIL TANK

| REF. NO. | PART NO. | DESCRIPTION | 2C81 | | | | | REMARKS |
|---|---|---|---|---|---|---|---|---|
| 28 | 97007–06008 | BOLT | 1 | | | | | |
| 29 | 90467–08003 | CLIP | 1 | | | | | |
| 30 | 1D0–H253F–01 | INSULATOR 2 | 1 | | | | | |
| 31 | 1D0–H254E–01 | INSULATOR | 1 | | | | | |
| 32 | 1D0–F174T–01 | INSULATOR, SIDE COVER 2 | 1 | | | | | |
| 33 | 1D0–F173T–00 | TAPE 1 | 2 | | | | | |

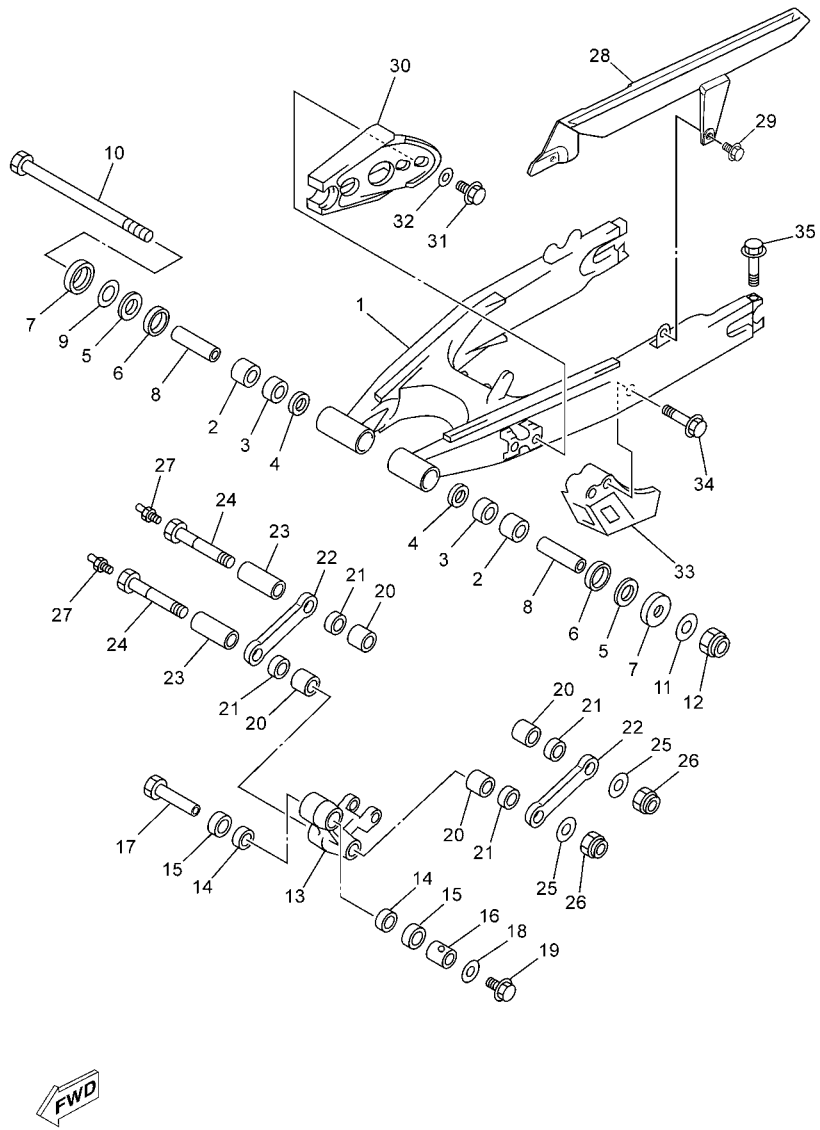


2C81300-C200

## FIG. 20 REAR ARM

| REF. NO. | PART NO. | DESCRIPTION | 2C81 | | | | | REMARKS |
|---|---|---|---|---|---|---|---|---|
| 1 | 4TP–22110–01–98 | REAR ARM COMP. | 1 | | | | | LGB |
| 2 | 93315–22251 | BEARING | 2 | | | | | |
| 3 | 90380–22111 | BUSH, SOLID | 2 | | | | | |
| 4 | 93106–22019 | OIL SEAL (DC 22-28-8) | 2 | | | | | |
| 5 | 90201–254H8 | WASHER, PLATE | 2 | | | | | |
| 6 | 93108–35004 | OIL SEAL (35-41-8) | 2 | | | | | |
| 7 | 30X–2219X–00 | COVER | 2 | | | | | |
| 8 | 90380–16077 | BUSH, SOLID | 2 | | | | | |
| 9 | 90201–251F6 | WASHER, PLATE (0.3T) | 2 | | | | | |
| 10 | 3R4–22141–00 | SHAFT, PIVOT | 1 | | | | | |
| 11 | 90201–164H4 | WASHER, PLATE | 1 | | | | | |
| 12 | 90185–16127 | NUT, SELF-LOCKING | 1 | | | | | |
| 13 | 3BN–2217A–10 | ARM, RELAY | 1 | | | | | |
| 14 | 93315–32052 | BEARING | 2 | | | | | |
| 15 | 93109–20076 | OIL SEAL | 2 | | | | | |
| 16 | 90387–164U7 | COLLAR | 1 | | | | | |
| 17 | 90402–10005 | NUT, UNION | 1 | | | | | |
| 18 | 90201–106F2 | WASHER, PLATE | 1 | | | | | |
| 19 | 95817–10016 | BOLT, FLANGE | 1 | | | | | |
| 20 | 90386–20120 | BUSH | 4 | | | | | |
| 21 | 93109–20076 | OIL SEAL | 4 | | | | | |
| 22 | 3BN–2217F–00 | ROD, CONNECTING 1 | 2 | | | | | |
| 23 | 90387–164U8 | COLLAR | 2 | | | | | |
| 24 | 90401–14136 | BOLT, UNION | 2 | | | | | |
| 25 | 90201–160F6 | WASHER, PLATE | 2 | | | | | |
| 26 | 90185–14112 | NUT, SELF-LOCKING | 2 | | | | | |
| 27 | 93700–06004 | NIPPLE, GREASE | 2 | | | | | |

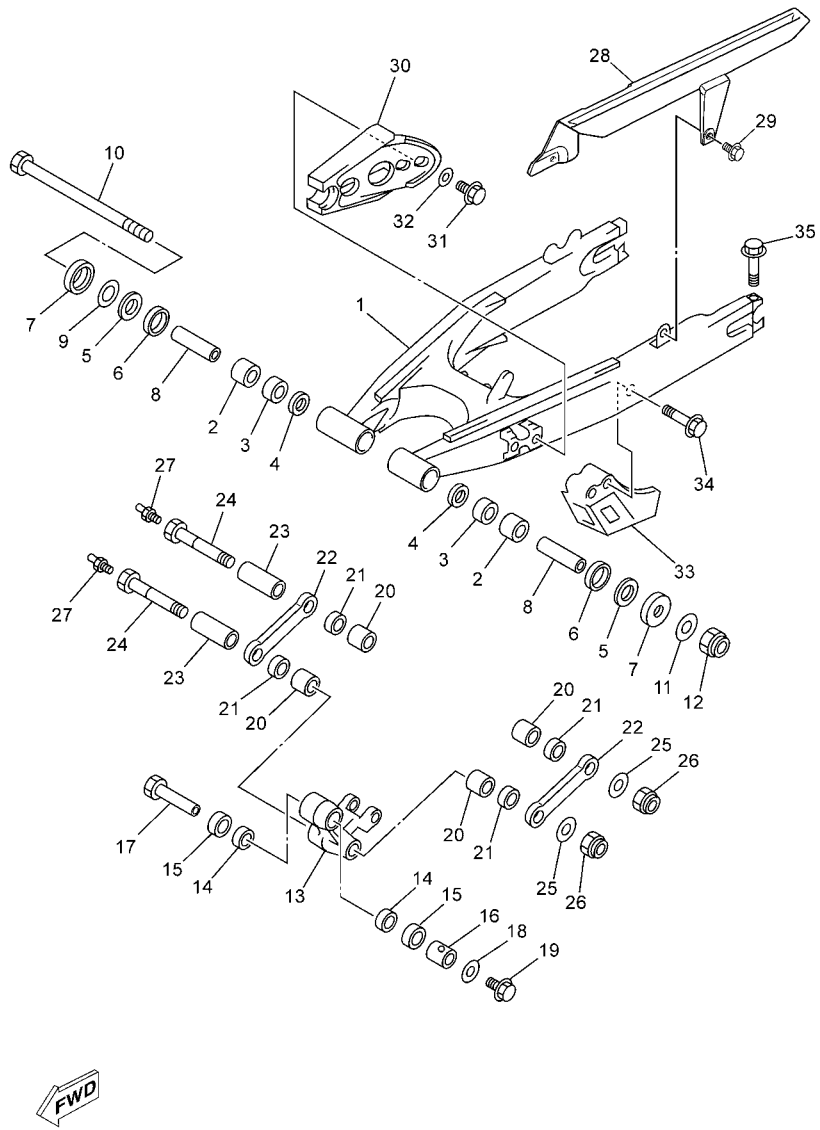


2C81300-C200

## FIG. 20 REAR ARM

| REF. NO. | PART NO. | DESCRIPTION | 2C81 | | | | | REMARKS |
|---|---|---|---|---|---|---|---|---|
| 28 | 2C8–F2311–00 | CASE, CHAIN | 1 | | | | | |
| 29 | 90119–06117 | BOLT, WITH WASHER | 2 | | | | | |
| 30 | 1LN–22151–00 | SEAL, GUARD | 1 | | | | | |
| 31 | 90119–06096 | BOLT, WITH WASHER | 2 | | | | | |
| 32 | 90209–06187 | WASHER | 2 | | | | | |
| 33 | 34X–22153–00 | GUARD, CHAIN | 1 | | | | | |
| 34 | 95807–06050 | BOLT, FLANGE | 2 | | | | | |
| 35 | 95027–06060 | BOLT, FLANGE | 2 | | | | | |

## FIG. 21 REAR SUSPENSION

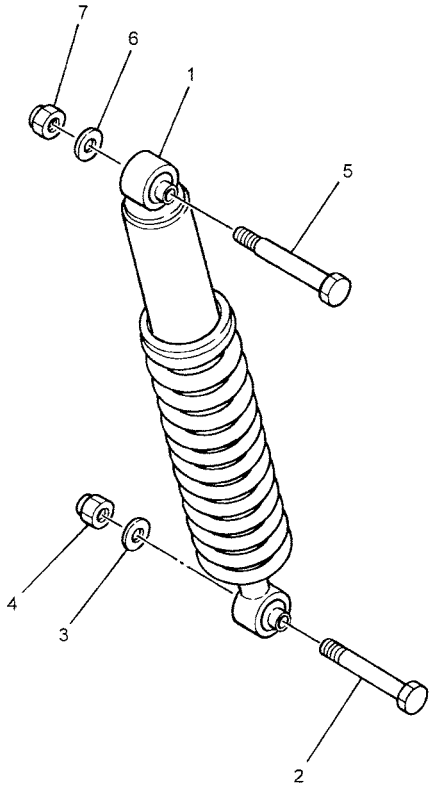

1D01300-C210

| REF. NO. | PART NO. | DESCRIPTION | 2C81 | | | | | REMARKS |
|---|---|---|---|---|---|---|---|---|
| 1 | 2C8–F2210–00 | SHOCK ABSORBER ASSY, REAR | 1 | | | | | |
| 2 | 90109–10704 | BOLT | 1 | | | | | |
| 3 | 90201–100E9 | WASHER, PLATE | 1 | | | | | |
| 4 | 90185–10120 | NUT, SELF-LOCKING | 1 | | | | | |
| 5 | 90109–100E2 | BOLT | 1 | | | | | |
| 6 | 90201–100E9 | WASHER, PLATE | 1 | | | | | |
| 7 | 90185–10120 | NUT, SELF-LOCKING | 1 | | | | | |

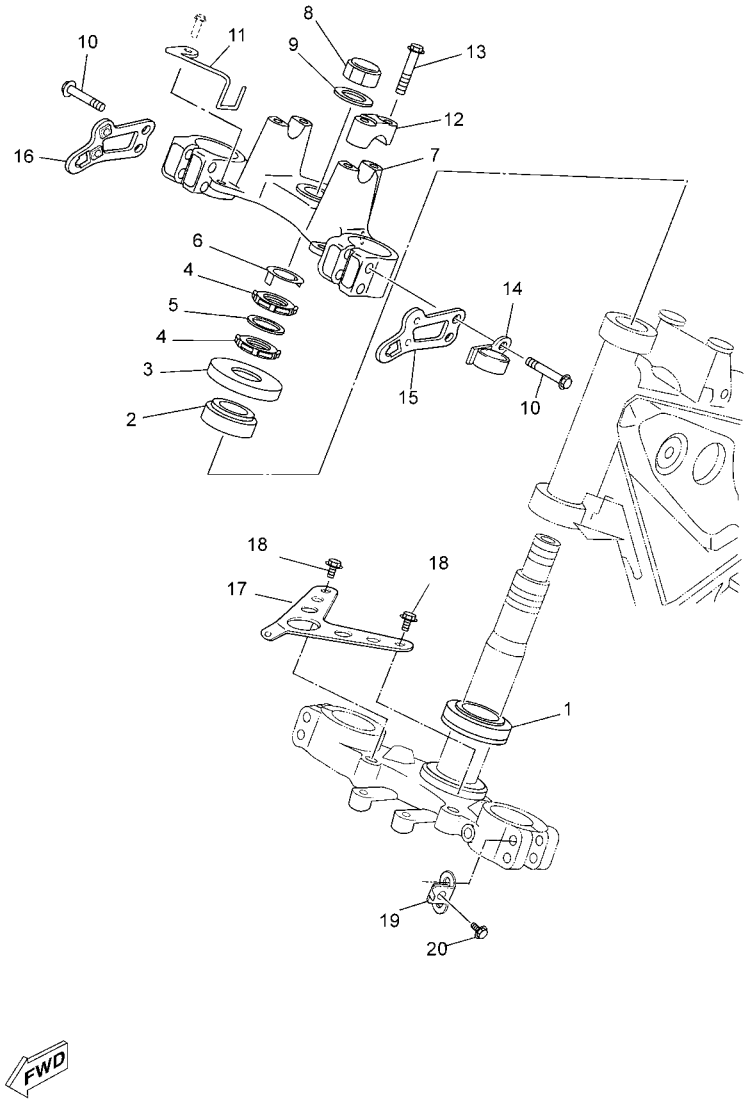


2C81300-C220

## FIG. 22 STEERING

| REF. NO. | PART NO. | DESCRIPTION | 2C81 | | | | | REMARKS |
|---|---|---|---|---|---|---|---|---|
| 1 | 93332–00008 | BEARING | 1 | | | | | |
| 2 | 93399–99931 | BEARING | 1 | | | | | |
| 3 | 4JG–23416–00 | COVER, BALL RACE 2 | 1 | | | | | |
| 4 | 90179–25615 | NUT | 2 | | | | | |
| 5 | 90202–26X00 | WASHER, PLATE | 1 | | | | | |
| 6 | 3YF–23418–00 | WASHER, SPECIAL | 1 | | | | | |
| 7 | 4TP–23435–00 | CROWN, HANDLE | 1 | | | | | |
| 8 | 90176–22081 | NUT, CROWN | 1 | | | | | |
| 9 | 90201–220T0 | WASHER, PLATE | 1 | | | | | |
| 10 | 95027–08040 | BOLT, FLANGE | 4 | | | | | |
| 11 | 1D0–26279–00 | GUIDE, CABLE | 1 | | | | | |
| 12 | 1E6–23441–10–35 | HOLDER, HANDLE UPPER | 2 | | | | | SL |
| 13 | 95024–08035 | BOLT, FLANGE | 4 | | | | | |
| 14 | 3R4–23317–00 | HOLDER, CABLE | 1 | | | | | |
| 15 | 1D0–F831V–00 | STAY, HEAD LIGHT 1 | 1 | | | | | |
| 16 | 1D0–F832V–00 | STAY, HEAD LIGHT 2 | 1 | | | | | |
| 17 | 2C8–F3174–00 | STAY, HEADLIGHT | 1 | | | | | |
| 18 | 9580M–06016 | BOLT, FLANGE | 2 | | | | | |
| 19 | 2C8–F3466–00 | CLAMP | 2 | | | | | |
| 20 | 9131M–06016 | BOLT | 2 | | | | | |

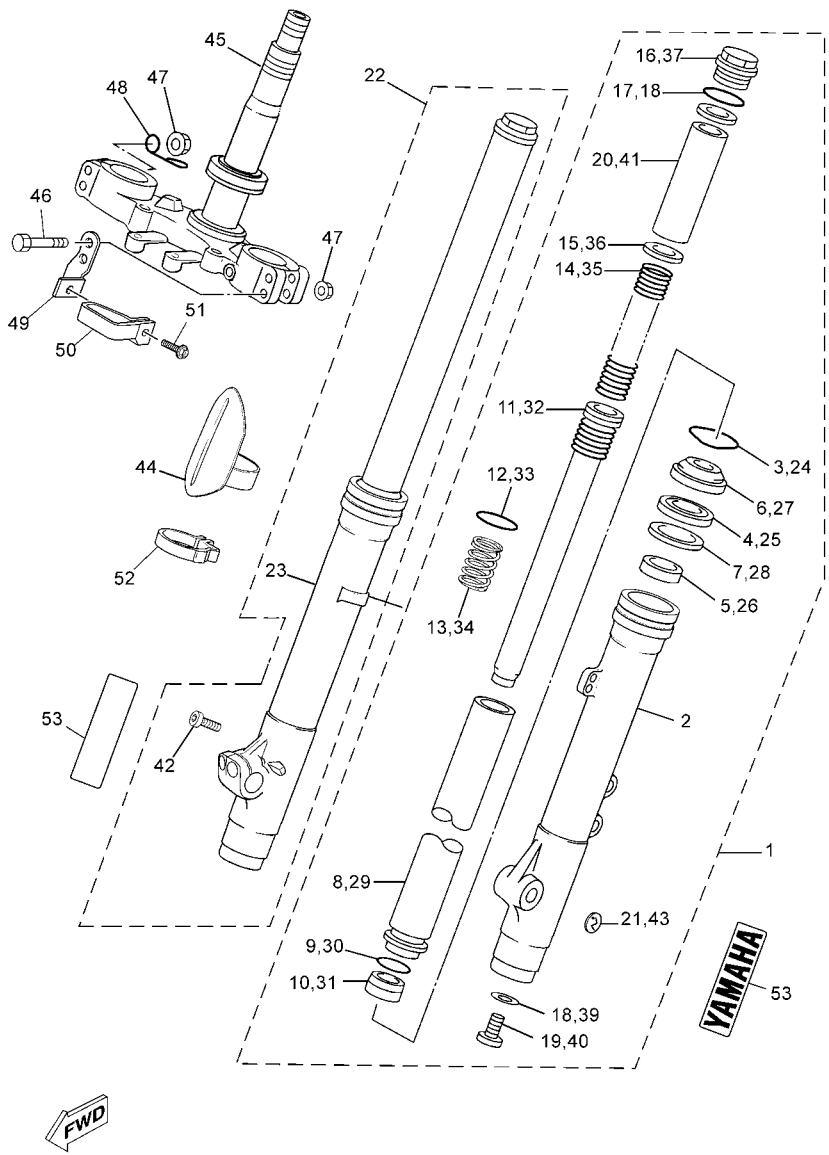


2C81300-E231

## FIG. 23 FRONT FORK

| REF. NO. | PART NO. | DESCRIPTION | 2C81 | | | | | REMARKS |
|---|---|---|---|---|---|---|---|---|
| 1 | 2C8–F3102–00 | FRONT FORK ASSY (L.H) | 1 | | | | | |
| 2 | 2C8–F3126–00 | .TUBE, OUTER (LEFT) | 1 | | | | | |
| 3 | 2C8–F3156–00 | .RING, SNAP | 1 | | | | | |
| 4 | 2C8–F3145–00 | .OIL SEAL | 1 | | | | | |
| 5 | 2C8–F3125–00 | .METAL, SLIDE 1 | 1 | | | | | |
| 6 | 2C8–F3144–00 | .SEAL, DUST | 1 | | | | | |
| 7 | 2C8–F3146–00 | .WASHER, OIL SEAL | 1 | | | | | |
| 8 | 2C8–F3110–00 | .INNER TUBE COMP.1 | 1 | | | | | |
| 9 | 2C8–F3171–00 | .PISTON, FRONT FORK | 1 | | | | | |
| 10 | 2C8–F3173–00 | .SPINDLE, TAPER | 1 | | | | | |
| 11 | 2C8–F3170–00 | .CYLINDER COMP., FRONT FORK | 1 | | | | | |
| 12 | 2C8–F3157–00 | .RING, PISTON | 1 | | | | | |
| 13 | 2C8–F3151–00 | .SPRING, REBOUND | 1 | | | | | |
| 14 | 2C8–F3141–00 | .SPRING, FRONT FORK | 1 | | | | | |
| 15 | 2C8–F3149–00 | .WASHER, SPRING UPPER | 1 | | | | | |
| 16 | 2C8–F3111–00 | .BOLT, CAP | 1 | | | | | |
| 17 | 2C8–F3188–00 | .O-RING | 1 | | | | | |
| 18 | 5VK–F3158–00 | .GASKET | 1 | | | | | |
| 19 | 5VK–F3181–00 | .BOLT, HEXAGON SOCKET HEAD | 1 | | | | | (PAIOLI) |
| 20 | 2C8–F3118–00 | .SPACER | 1 | | | | | |
| 21 | 2C8–F3108–00 | .EMBLEM | 1 | | | | | |
| 22 | 2C8–F3103–00 | FRONT FORK ASSY (R.H) | 1 | | | | | |
| 23 | 2C8–F3136–00 | .TUBE, OUTER (RIGHT) | 1 | | | | | |
| 24 | 2C8–F3156–00 | .RING, SNAP | 1 | | | | | |
| 25 | 2C8–F3145–00 | .OIL SEAL | 1 | | | | | |
| 26 | 2C8–F3125–00 | .METAL, SLIDE 1 | 1 | | | | | |
| 27 | 2C8–F3144–00 | .SEAL, DUST | 1 | | | | | |

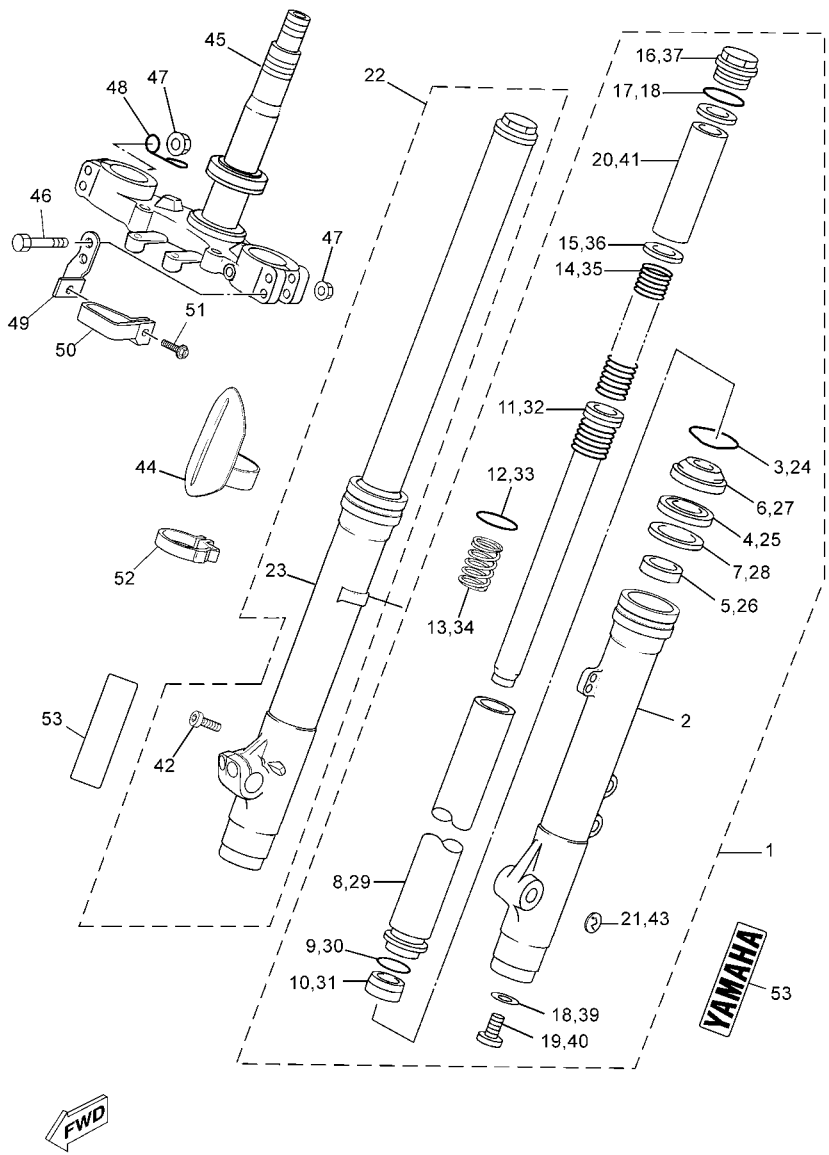


2C81300-E231

## FIG. 23 FRONT FORK

| REF. NO. | PART NO. | DESCRIPTION | 2C81 | | | | | REMARKS |
|---|---|---|---|---|---|---|---|---|
| 28 | 2C8–F3146–00 | .WASHER, OIL SEAL | 1 | | | | | |
| 29 | 2C8–F3110–00 | .INNER TUBE COMP.1 | 1 | | | | | |
| 30 | 2C8–F3171–00 | .PISTON, FRONT FORK | 1 | | | | | |
| 31 | 2C8–F3173–00 | .SPINDLE, TAPER | 1 | | | | | |
| 32 | 2C8–F3170–00 | .CYLINDER COMP., FRONT FORK | 1 | | | | | |
| 33 | 2C8–F3157–00 | .RING, PISTON | 1 | | | | | |
| 34 | 2C8–F3151–00 | .SPRING, REBOUND | 1 | | | | | |
| 35 | 2C8–F3141–00 | .SPRING, FRONT FORK | 1 | | | | | |
| 36 | 2C8–F3149–00 | .WASHER, SPRING UPPER | 1 | | | | | |
| 37 | 2C8–F3111–00 | .BOLT, CAP | 1 | | | | | |
| 38 | 2C8–F3188–00 | .O-RING | 1 | | | | | |
| 39 | 5VK–F3158–00 | .GASKET | 1 | | | | | |
| 40 | 5VK–F3181–00 | .BOLT, HEXAGON SOCKET HEAD | 1 | | | | | (PAIOLI) |
| 41 | 2C8–F3118–00 | .SPACER | 1 | | | | | |
| 42 | 5VK–F3128–00 | .BOLT, AXLE HOLDER | 2 | | | | | |
| 43 | 2C8–F3108–00 | .EMBLEM | 1 | | | | | |
| 44 | 2C8–F331G–00 | COVER | 1 | | | | | |
| 45 | 2C8–F3340–00 | UNDER BRACKET COMP. | 1 | | | | | |
| 46 | 9581L–08055 | BOLT, FLANGE | 4 | | | | | |
| 47 | 9570L–08500 | NUT, FLANGE | 4 | | | | | |
| 48 | 2C8–F3389–00 | GUIDE, CABLE | 1 | | | | | |
| 49 | 2C8–F331E–00 | GUIDE, CABLE | 1 | | | | | |
| 50 | 4DA–23389–00 | GUIDE, CABLE | 1 | | | | | |
| 51 | 90119–05071 | BOLT, WITH WASHER | 1 | | | | | |
| 52 | 4PX–23318–00 | HOLDER, CABLE 1 | 1 | | | | | |
| 53 | 1D0–F313B–00 | EMBLEM 1 | 2 | | | | | UR for DPBSE |

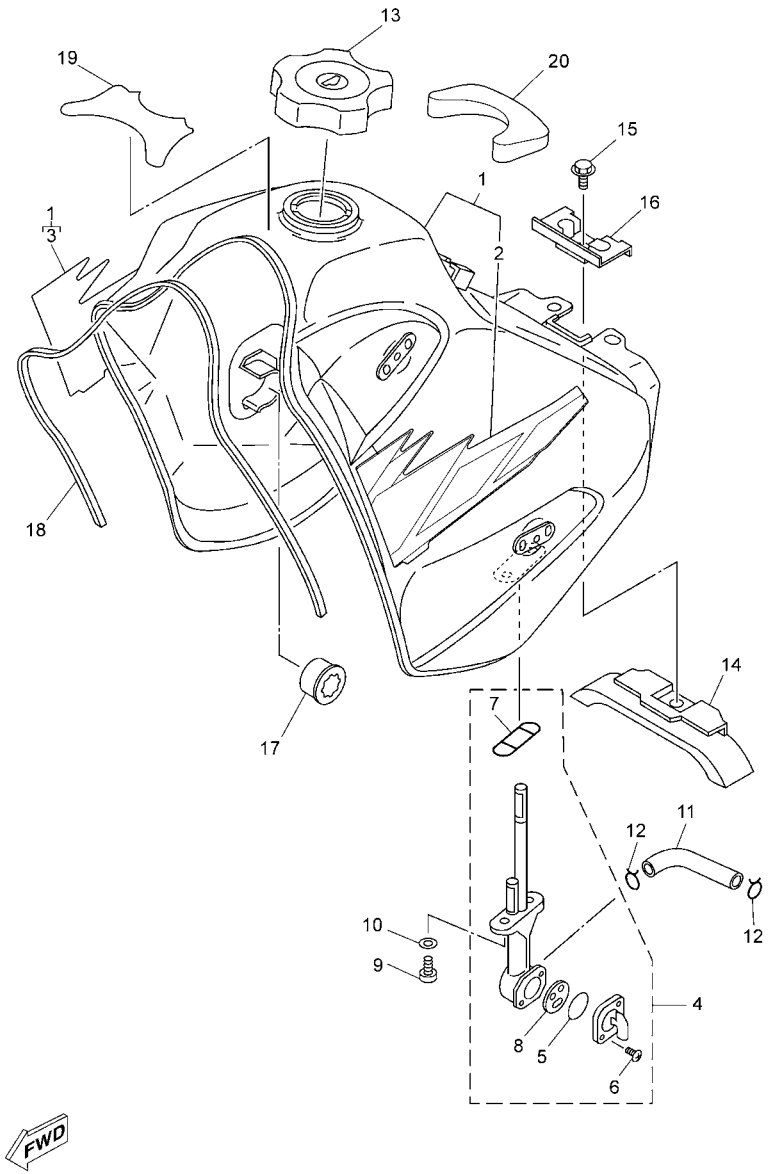


2C81300-C240

## FIG. 24 FUEL TANK

| REF. NO. | PART NO. | DESCRIPTION | 2C81 | | | | | REMARKS |
|---|---|---|---|---|---|---|---|---|
| 1 | 2C8–F4110–00–P0 | FUEL TANK COMP. | 1 | | | | | DPBSE |
| | 2C8–F4110–00–33 | FUEL TANK COMP. | 1 | | | | | YB |
| 2 | 2C8–F424A–00 | .GRAPHIC 7 | 1 | | | | | UR DPBS1 |
| | 2C8–F424A–10 | .GRAPHIC 7 | 1 | | | | | UR YB |
| 3 | 2C8–F424B–00 | .GRAPHIC 8 | 1 | | | | | UR DPBS1 |
| | 2C8–F424B–10 | .GRAPHIC 8 | 1 | | | | | UR YB |
| 4 | 4TP–24500–00 | FUEL COCK ASSY 1 | 1 | | | | | |
| 5 | 3AJ–24534–00 | .SEAL, COCK | 1 | | | | | |
| 6 | 98507–03008 | .SCREW, PAN HEAD | 2 | | | | | |
| 7 | 4X8–24512–00 | .O-RING | 1 | | | | | |
| 8 | 3AJ–24523–00 | .VALVE PACKING | 1 | | | | | |
| 9 | 90149–06011 | SCREW | 2 | | | | | |
| 10 | 90202–05193 | WASHER, PLATE | 2 | | | | | |
| 11 | 1D0–F4311–00 | PIPE, FUEL 1 | 1 | | | | | |
| 12 | 90467–11X01 | CLIP | 2 | | | | | |
| 13 | 11H–24602–03 | CAP ASSY | 1 | | | | | |
| 14 | 3BN–24182–00 | DAMPER, LOCATING 2 | 1 | | | | | |
| 15 | 95827–06016 | BOLT, FLANGE | 1 | | | | | |
| 16 | 34X–24186–01 | WASHER, SPECIAL | 1 | | | | | |
| 17 | 26H–24181–00 | DAMPER, LOCATING 1 | 2 | | | | | |
| 18 | 4TP–24188–00 | MOLD, FUEL TANK | 1 | | | | | |
| 19 | 4TP–24141–00 | PROTECTOR, FUEL TANK | 1 | | | | | |
| 20 | 5RS–24141–01 | PROTECTOR, FUEL TANK | 1 | | | | | |

## FIG. 25 SEAT

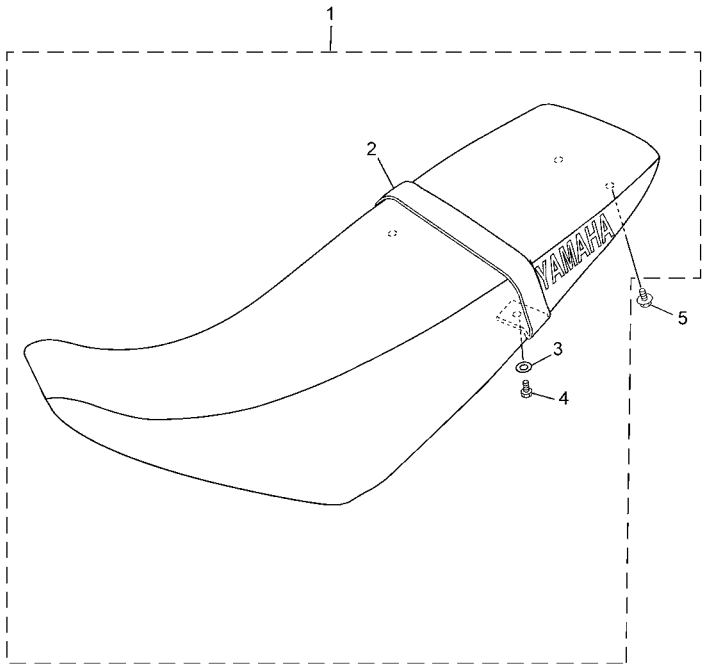

2C81300-C250

| REF. NO. | PART NO. | DESCRIPTION | 2C81 | | | | | REMARKS |
|---|---|---|---|---|---|---|---|---|
| 1 | 2C8–F4730–00 | DOUBLE SEAT ASSY | 1 | | | | | UR DPBS1 |
| | 2C8–F4730–10 | DOUBLE SEAT ASSY | 1 | | | | | UR YB |
| 2 | 1D0–F4734–00 | .BAND, SEAT | 1 | | | | | UR DPBS1 |
| | 1D0–F4734–10 | .BAND, SEAT | 1 | | | | | UR YB |
| 3 | 90201–06765 | .WASHER, PLATE | 2 | | | | | |
| 4 | 97507–06420 | .BOLT, WITH WASHER | 2 | | | | | |
| 5 | 9580M–06012 | BOLT, FLANGE | 2 | | | | | |

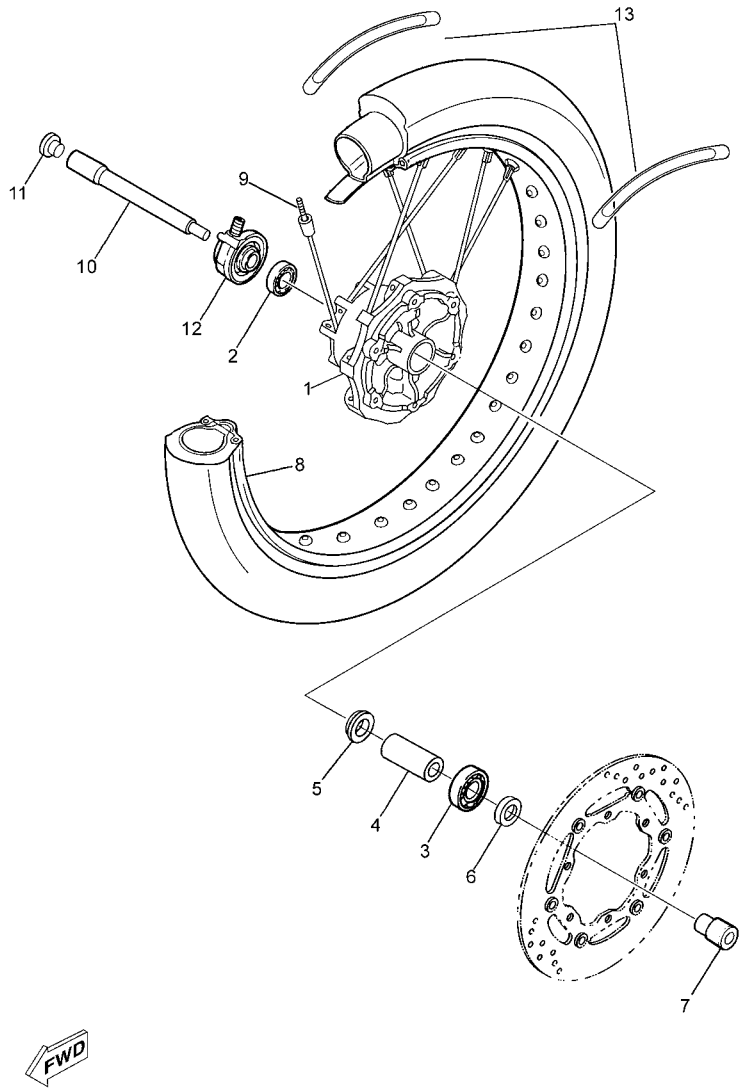


2C81300-C260

## FIG. 26 FRONT WHEEL

| REF. NO. | PART NO. | DESCRIPTION | 2C81 | | | | | REMARKS |
|---|---|---|---|---|---|---|---|---|
| 1 | 2C8–25111–00–35 | HUB, FRONT | 1 | | | | | SL |
| 2 | 93306–20348 | BEARING | 2 | | | | | |
| 3 | 93306–20212 | BEARING | 1 | | | | | |
| 4 | 90560–15161 | SPACER | 1 | | | | | |
| 5 | 136–25115–00 | FLANGE, SPACER 1 | 1 | | | | | |
| 6 | 93102–23002 | OIL SEAL | 1 | | | | | |
| 7 | 90387–15008 | COLLAR | 1 | | | | | |
| 8 | 94430–17003 | RIM | 1 | | | | | |
| 9 | 2C8–25104–10 | SPOKE SET, FRONT | 1 | | | | | |
| 10 | 55U–25181–01 | AXLE, WHEEL | 1 | | | | | |
| 11 | 90338–11125 | PLUG | 1 | | | | | |
| 12 | 2C8–25190–00 | GEAR UNIT ASSY | 1 | | | | | |

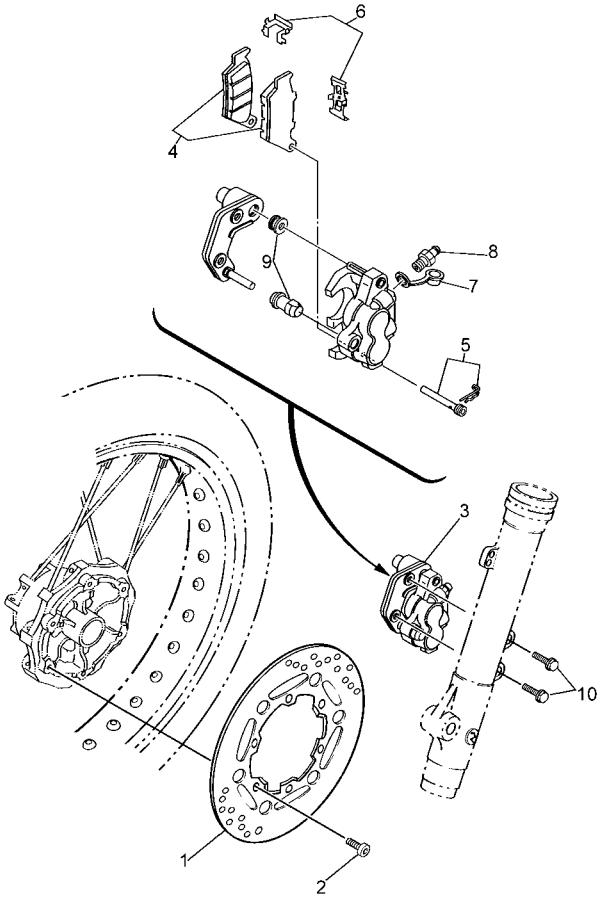

2C81300-C270

## FIG. 27 FRONT BRAKE CALIPER

| REF. NO. | PART NO. | DESCRIPTION | 2C81 | | | | | REMARKS |
|---|---|---|---|---|---|---|---|---|
| 1 | 5VK–F581T–00 | DISK BRAKE ASSY | 1 | | | | | |
| 2 | 90109–081F0 | BOLT | 6 | | | | | |
| 3 | 2C8–F580T–00 | CALIPER ASSY (LEFT) | 1 | | | | | |
| 4 | 2C8–W0045–00 | .BRAKE PAD KIT | 1 | | | | | |
| 5 | 5VK–F5924–00 | .PIN, PAD | 1 | | | | | (BREMBO) |
| 6 | 5VK–F5919–00 | .SUPPORT, PAD | 1 | | | | | (BREMBO) |
| 7 | 5DS–F5825–00 | .CAP | 1 | | | | | (BREMBO) |
| 8 | 5SE–F5824–00 | .SCREW, BLEED | 1 | | | | | (BREMBO) |
| 9 | 5DS–F5917–00 | .BOOT, CALIPER | 1 | | | | | (BREMBO) |
| 10 | 90105–10069 | BOLT, FLANGE | 2 | | | | | |

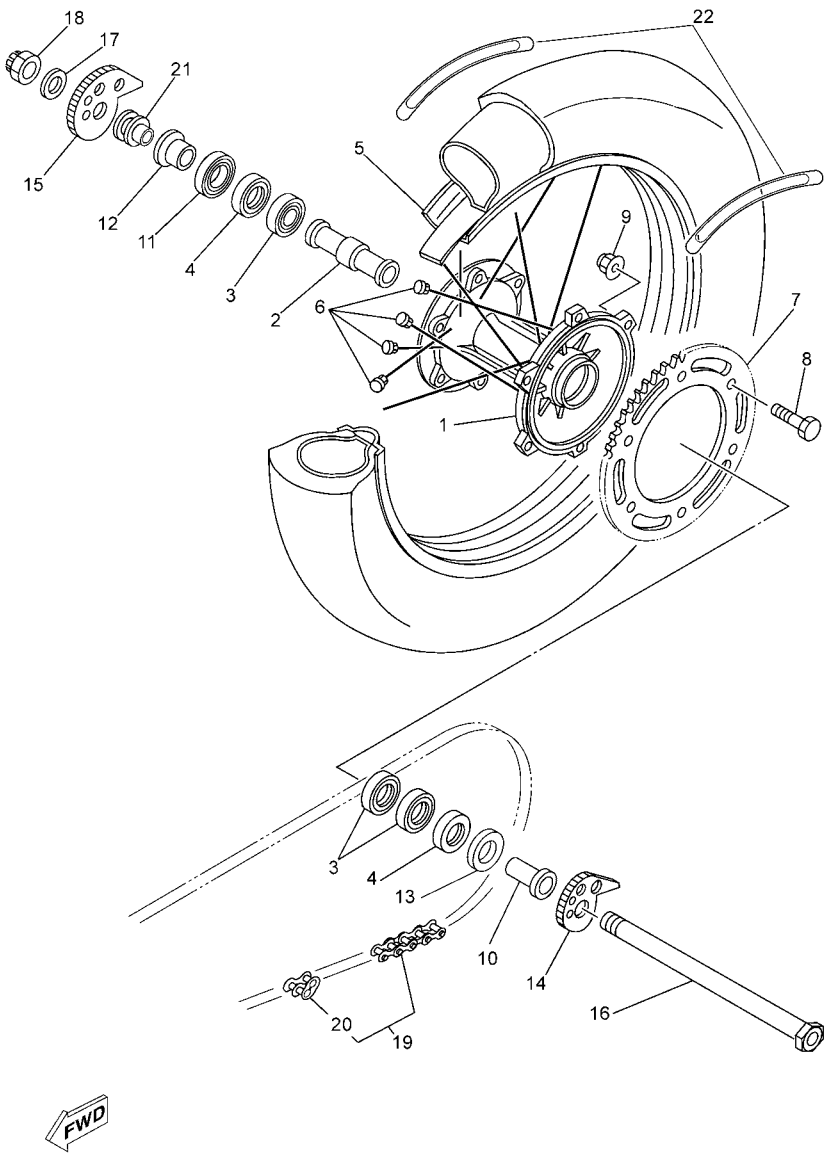


2C81300-C280

## FIG. 28 REAR WHEEL

| REF. NO. | PART NO. | DESCRIPTION | 2C81 | | | | | REMARKS |
|---|---|---|---|---|---|---|---|---|
| 1 | 3XP–25311–00–35 | HUB, REAR | 1 | | | | | SL |
| 2 | 90560–20278 | SPACER | 1 | | | | | |
| 3 | 93306–00416 | BEARING | 3 | | | | | |
| 4 | 93106–28023 | OIL SEAL | 2 | | | | | |
| 5 | 94435–17003 | RIM | 1 | | | | | |
| 6 | 2C8–25304–00 | SPOKE SET, REAR | 1 | | | | | |
| 7 | 1D0–F5457–00 | SPROCKET, DRIVEN (57T) | 1 | | | | | |
| 8 | 90109–08618 | BOLT | 6 | | | | | |
| 9 | 90185–08146 | NUT, SELF-LOCKING | 6 | | | | | |
| 10 | 90387–204U9 | COLLAR | 1 | | | | | |
| 11 | 4V4–25367–00 | COVER, HUB DUST | 1 | | | | | |
| 12 | 90387–202U8 | COLLAR | 1 | | | | | |
| 13 | 4V4–25367–00 | COVER, HUB DUST | 1 | | | | | |
| 14 | 3BN–25388–00 | PULLER, CHAIN 1 | 1 | | | | | |
| 15 | 3BN–25389–00 | PULLER, CHAIN 2 | 1 | | | | | |
| 16 | 3BN–25381–10 | AXLE, WHEEL | 1 | | | | | |
| 17 | 90201–204M9 | WASHER, PLATE | 1 | | | | | |
| 18 | 90185–18104 | NUT, SELF-LOCKING | 1 | | | | | |
| 19 | 94581–33134 | CHAIN (DID428V2-134L) | 1 | | | | | |
| 20 | 94681–33011 | .JOINT, CHAIN (DID 428V2-FJ) | 1 | | | | | |
| 21 | 4TP–25383–00 | COLLAR, WHEEL | 1 | | | | | |

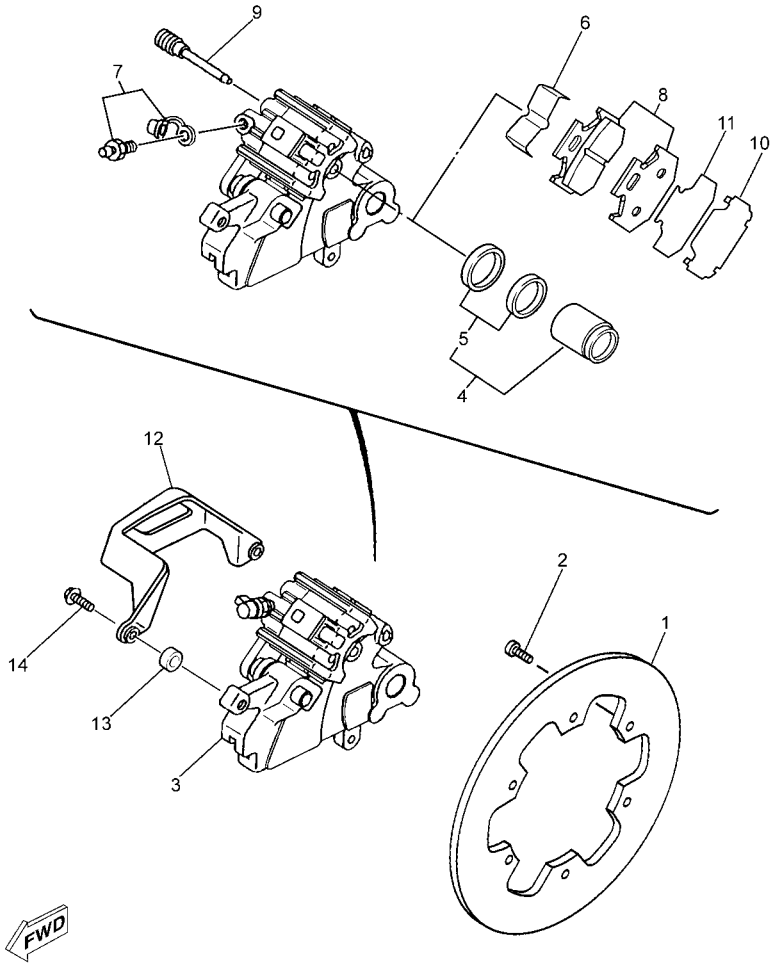


2C81300-C290

## FIG. 29 REAR BRAKE CALIPER

| REF. NO. | PART NO. | DESCRIPTION | 2C81 | | | | | REMARKS |
|---|---|---|---|---|---|---|---|---|
| 1 | 2C8–F582W–00 | DISK, REAR BRAKE 2 | 1 | | | | | |
| 2 | 90109–065F3 | BOLT | 6 | | | | | |
| 3 | 2C8–F580W–00 | CALIPER ASSY, REAR 2 | 1 | | | | | |
| 4 | 3SP–W0057–50 | .PISTON ASSY, CALIPER | 1 | | | | | |
| 5 | 3JD–W0047–50 | .CALIPER SEAL KIT | 1 | | | | | |
| 6 | 4GY–25919–50 | ..SUPPORT, PAD | 1 | | | | | |
| 7 | 1UY–W0048–50 | .BLEED SCREW KIT | 1 | | | | | |
| 8 | 4GY–W0046–00 | .BRAKE PAD KIT 2 | 1 | | | | | |
| 9 | 3SP–25924–51 | .PIN, PAD | 2 | | | | | |
| 10 | 4GY–25827–50 | .SHIM, CALIPER | 1 | | | | | |
| 11 | 4GY–22898–50 | .INSULATOR, HEAT | 1 | | | | | |
| 12 | 4GY–27491–00 | PROTECTOR | 1 | | | | | |
| 13 | 90387–061V4 | COLLAR | 2 | | | | | |
| 14 | 95027–06016 | BOLT, FLANGE | 2 | | | | | |

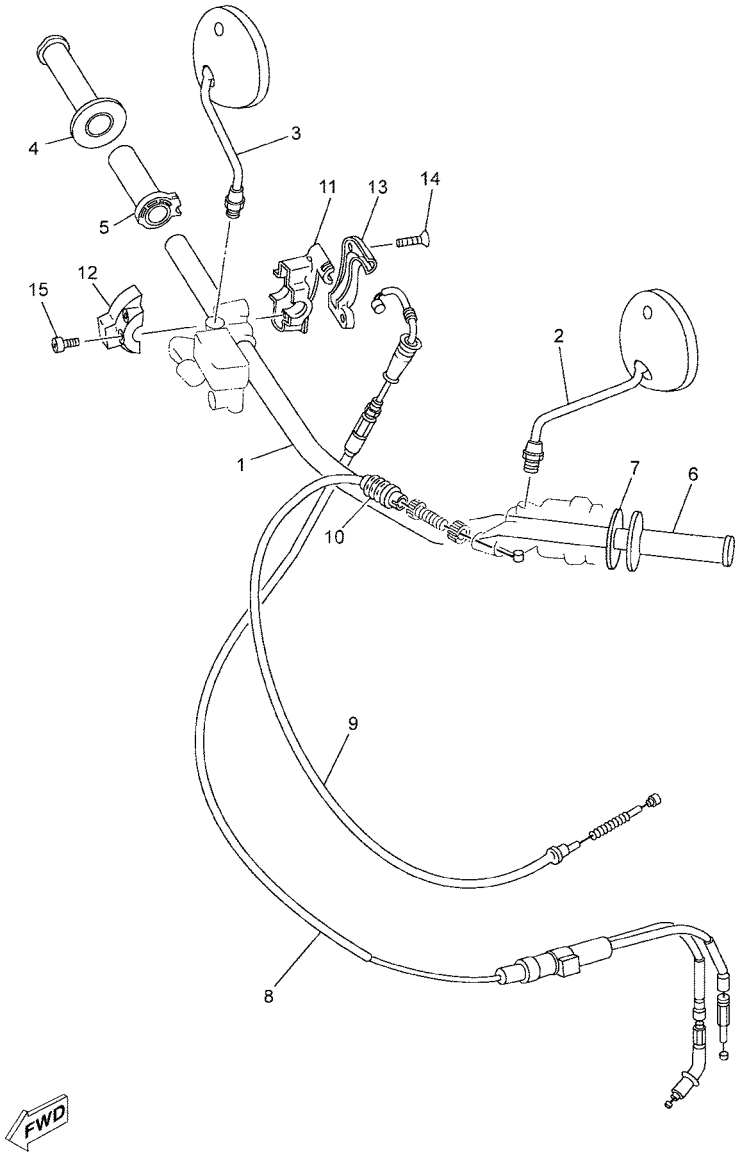


1D01300-C300

## FIG. 30 STEERING HANDLE & CABLE

| REF. NO. | PART NO. | DESCRIPTION | 2C81 | | | | | REMARKS |
|---|---|---|---|---|---|---|---|---|
| 1 | 4TP–26111–00 | HANDLEBAR | 1 | | | | | |
| 2 | 1D0–F6280–00 | REAR VIEW MIRROR ASSY (LEFT) | 1 | | | | | |
| 3 | 1D0–F6290–00 | REAR VIEW MIRROR ASSY (RIGHT) | 1 | | | | | |
| 4 | 4GY–26242–00 | GRIP (RIGHT) | 1 | | | | | |
| 5 | 22W–26243–00 | TUBE, THROTTLE GUIDE | 1 | | | | | |
| 6 | 4GY–26241–00 | GRIP | 1 | | | | | |
| 7 | 4RR–26129–00 | WASHER | 1 | | | | | |
| 8 | 3RM–26301–01 | THROTTLE CABLE ASSY | 1 | | | | | |
| 9 | 3BN–26335–00 | CABLE, CLUTCH | 1 | | | | | |
| 10 | 1E6–26342–00 | BOOT, CABLE | 1 | | | | | |
| 11 | 5X2–26281–00 | CAP, GRIP UPPER | 1 | | | | | |
| 12 | 322–26282–00 | CAP, GRIP UNDER | 1 | | | | | |
| 13 | 5X2–2628H–01 | CAP, WIRE | 1 | | | | | |
| 14 | 98707–04012 | SCREW, FLAT HEAD | 2 | | | | | |
| 15 | 98507–05016 | SCREW, PAN HEAD | 2 | | | | | |

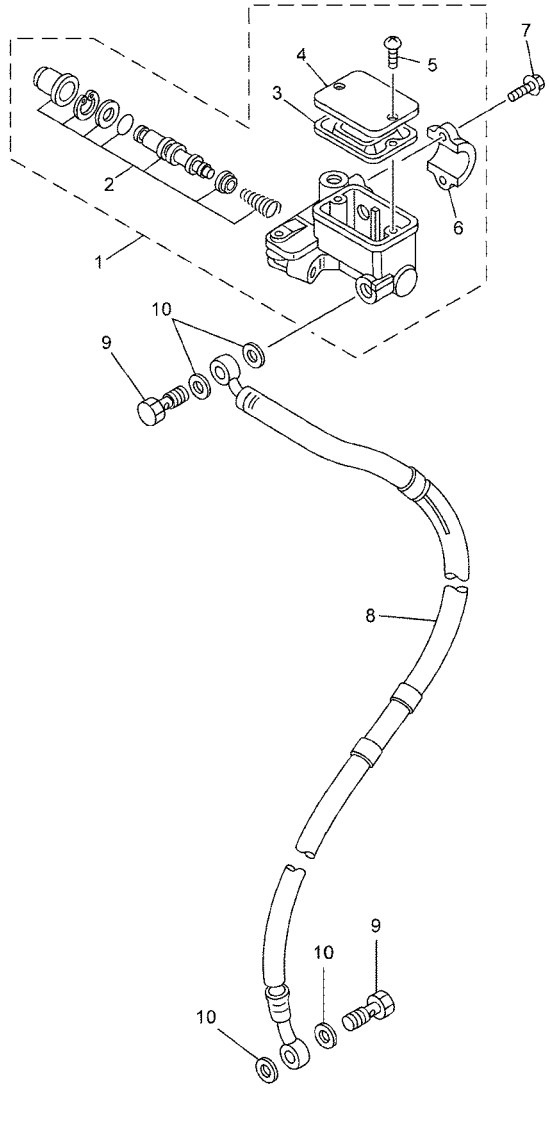


1D01300-C310

## FIG. 31 FRONT MASTER CYLINDER

| REF. NO. | PART NO. | DESCRIPTION | 2C81 | | | | | REMARKS |
|---|---|---|---|---|---|---|---|---|
| 1 | 2C8–F583T–00 | MASTER CYLINDER ASSY | 1 | | | | | |
| 2 | 59X–W0041–00 | .CYLINDER KIT, MASTER | 1 | | | | | |
| 3 | 55U–25854–00 | .GASKET, DIAPHRAGM | 1 | | | | | |
| 4 | 2C8–F5852–00 | .CAP, RESERVOIR | 1 | | | | | |
| 5 | 98706–04012 | .SCREW, FLAT HEAD | 2 | | | | | |
| 6 | 56A–25867–00 | .BRACKET, MASTER CYLINDER | 1 | | | | | |
| 7 | 9502M–06025 | BOLT, FLANGE | 2 | | | | | |
| 8 | 2C8–F5872–00 | HOSE, BRAKE 1 | 1 | | | | | |
| 9 | 90401–10X04 | BOLT, UNION | 2 | | | | | |
| 10 | 90201–10118 | WASHER, PLATE | 4 | | | | | |

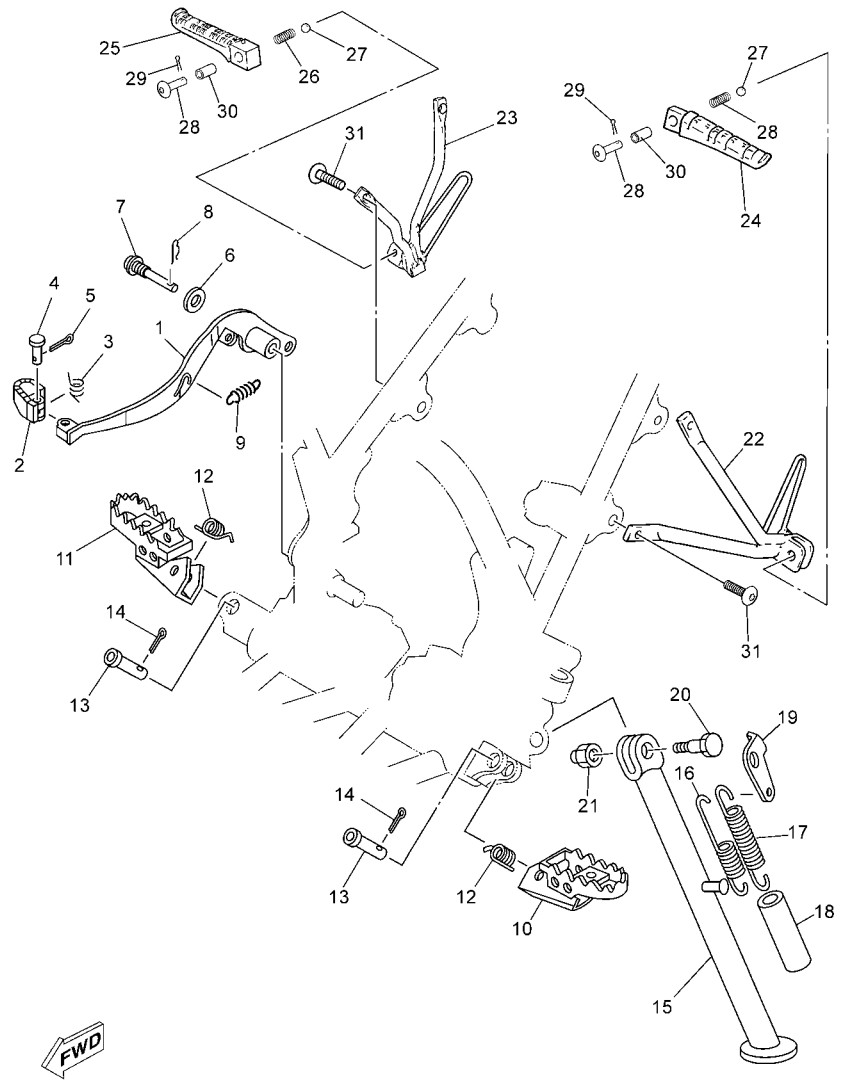


2C81300-C320

## FIG. 32 STAND & FOOTREST

| REF. NO. | PART NO. | DESCRIPTION | 2C81 | | | | | REMARKS |
|---|---|---|---|---|---|---|---|---|
| 1 | 3BN–27211–01 | PEDAL, BRAKE | 1 | | | | | |
| 2 | 55V–27242–00 | PEDAL, BRAKE | 1 | | | | | |
| 3 | 90508–14352 | SPRING, TORSION | 1 | | | | | |
| 4 | 91701–06022 | PIN | 1 | | | | | |
| 5 | 91401–20012 | PIN, COTTER | 1 | | | | | |
| 6 | 90201–086P8 | WASHER, PLATE | 1 | | | | | |
| 7 | 90149–08269 | SCREW | 1 | | | | | |
| 8 | 437–83525–00 | CLIP | 1 | | | | | |
| 9 | 90506–18305 | SPRING, TENSION | 1 | | | | | |
| 10 | 3LD–27411–01 | FOOTREST 1 | 1 | | | | | |
| 11 | 3LD–27421–01 | FOOTREST 2 | 1 | | | | | |
| 12 | 90508–20583 | SPRING, TORSION | 2 | | | | | |
| 13 | 90240–10101 | PIN, CLEVIS | 2 | | | | | |
| 14 | 91401–25015 | PIN, COTTER | 2 | | | | | |
| 15 | 2C8–F7311–00 | STAND, SIDE | 1 | | | | | |
| 16 | 90506–26225 | SPRING, TENSION | 1 | | | | | |
| 17 | 90506–18224 | SPRING, TENSION | 1 | | | | | |
| 18 | 1TX–27351–00 | GUIDE, SIDE STAND | 1 | | | | | |
| 19 | 42U–27315–01 | LINK, SIDE STAND | 1 | | | | | |
| 20 | 90109–10474 | BOLT | 1 | | | | | |
| 21 | 90185–10037 | NUT, SELF-LOCKING | 1 | | | | | |
| 22 | 1D0–F7432–00 | BRACKET 1 | 1 | | | | | |
| 23 | 1D0–F7442–00 | BRACKET 2 | 1 | | | | | |
| 24 | 5WX–F7431–00 | FOOTREST, REAR 1 | 1 | | | | | |
| 25 | 5WX–F7441–00 | FOOTREST, REAR 2 | 1 | | | | | |
| 26 | 90501–12743 | SPRING, COMPRESSION | 2 | | | | | |
| 27 | 93501–04011 | BALL | 2 | | | | | |

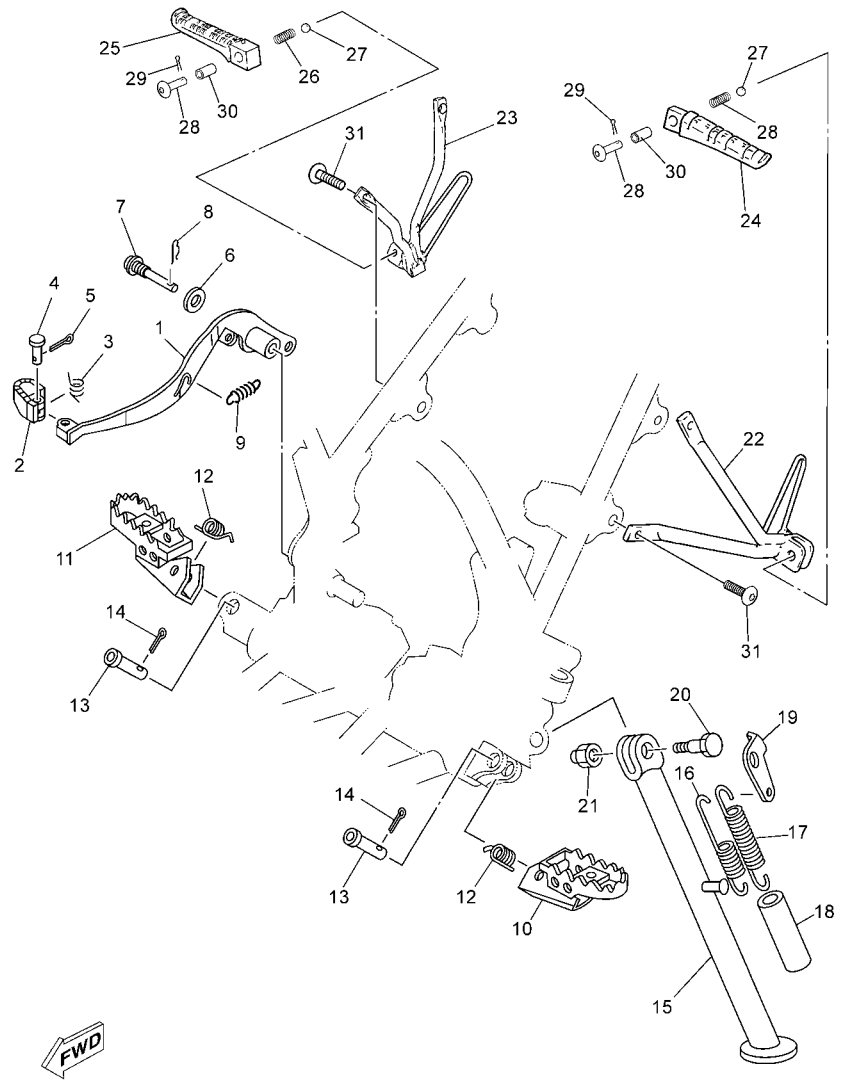


2C81300-C320

## FIG. 32 STAND & FOOTREST

| REF. NO. | PART NO. | DESCRIPTION | 2C81 | | | | | REMARKS |
|---|---|---|---|---|---|---|---|---|
| 28 | 90240–06042 | PIN, CLEVIS | 2 | | | | | |
| 29 | 91401–16012 | PIN, COTTER | 2 | | | | | |
| 30 | 90387–064H8 | COLLAR | 2 | | | | | |
| 31 | 92017–08016 | BOLT, BUTTON HEAD | 4 | | | | | |

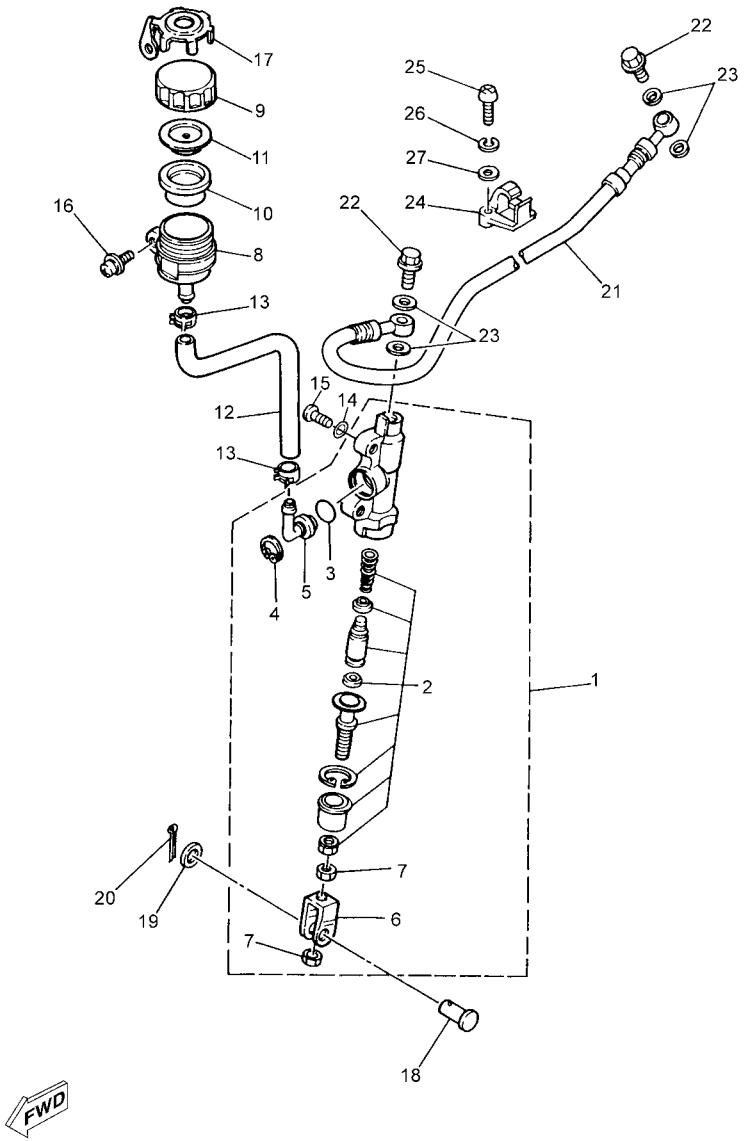


2C81300-C330

## FIG. 33 REAR MASTER CYLINDER

| REF. NO. | PART NO. | DESCRIPTION | 2C81 | | | | | REMARKS |
|---|---|---|---|---|---|---|---|---|
| 1 | 2C8–2583V–00 | RR. MASTER CYLINDER ASSY. | 1 | | | | | |
| 2 | 3BN–W0042–50 | .CYLINDER KIT, MASTER | 1 | | | | | |
| 3 | 93210–15620 | .O-RING | 1 | | | | | |
| 4 | 2VN–25866–00 | .CIRCLIP | 1 | | | | | |
| 5 | 2VN–2582A–50 | .JOINT | 1 | | | | | |
| 6 | 2YK–27222–00 | .JOINT | 1 | | | | | |
| 7 | 95307–08600 | .NUT | 2 | | | | | |
| 8 | 2VN–25894–00 | TANK, RESERVOIR | 1 | | | | | |
| 9 | 2VN–25852–50 | CAP, RESERVOIR | 1 | | | | | |
| 10 | 2VN–25854–00 | GASKET, DIAPHRAGM | 1 | | | | | |
| 11 | 2VN–25855–00 | BUSH,DIAPHRAGM | 1 | | | | | |
| 12 | 1D0–F5895–00 | HOSE, RESERVOIR | 1 | | | | | |
| 13 | 90467–11044 | CLIP | 2 | | | | | |
| 14 | 9290M–06200 | WASHER | 2 | | | | | |
| 15 | 92017–06016 | BOLT, BUTTON HEAD | 2 | | | | | |
| 16 | 90159–06056 | SCREW, WITH WASHER | 1 | | | | | |
| 17 | 3ET–25888–00 | COVER, RESERVOIR TANK | 1 | | | | | |
| 18 | 90240–08124 | PIN, CLEVIS | 1 | | | | | |
| 19 | 90201–08083 | WASHER, PLATE | 1 | | | | | |
| 20 | 91401–16012 | PIN, COTTER | 1 | | | | | |
| 21 | 2C8–F5873–00 | HOSE, BRAKE 2 | 1 | | | | | |
| 22 | 90401–10X04 | BOLT, UNION | 2 | | | | | |
| 23 | 90201–10118 | WASHER, PLATE | 4 | | | | | |
| 24 | 3BN–25876–00 | HOLDER, BRAKE HOSE 2 | 2 | | | | | |
| 25 | 98507–05020 | SCREW, PAN HEAD | 4 | | | | | |
| 26 | 92907–05100 | WASHER, SPRING | 4 | | | | | |
| 27 | 92907–05600 | WASHER, PLATE | 4 | | | | | |

## FIG. 34 GENERATOR

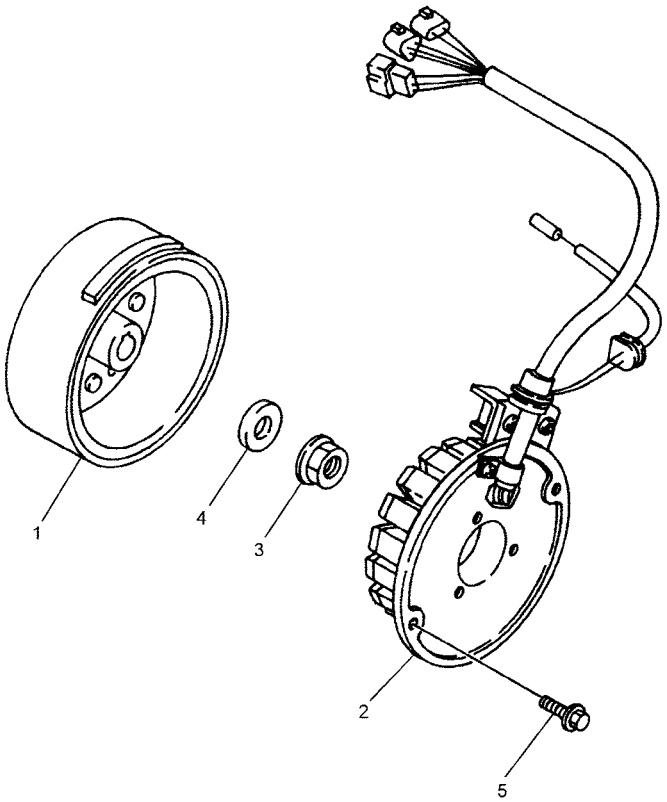

1D01300-C340

| REF. NO. | PART NO. | DESCRIPTION | 2C81 | | | | | REMARKS |
|---|---|---|---|---|---|---|---|---|
| 1 | 4FU–85550–00 | ROTOR ASSY | 1 | | | | | |
| 2 | 4FU–85560–02 | BASE ASSY | 1 | | | | | |
| 3 | 90179–12248 | NUT | 1 | | | | | |
| 4 | 90201–123L6 | WASHER, PLATE | 1 | | | | | |
| 5 | 95027–06020 | BOLT, FLANGE | 2 | | | | | |

## FIG. 35 STARTING MOTOR

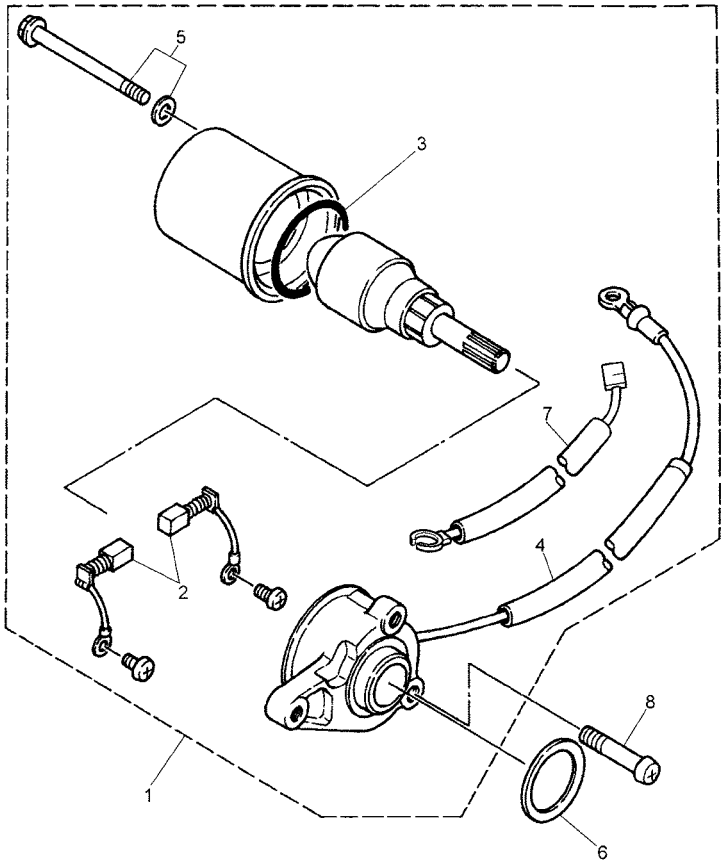

1D01300-C350

| REF. NO. | PART NO. | DESCRIPTION | 2C81 | | | | | REMARKS |
|---|---|---|---|---|---|---|---|---|
| 1 | 3MB–81800–02 | STARTING MOTOR ASSY | 1 | | | | | |
| 2 | 50W–81801–M0 | .BRUSH SET | 1 | | | | | |
| 3 | 93210–44678 | .O-RING | 1 | | | | | |
| 4 | 3MB–8183G–01 | .CORD COMP. | 1 | | | | | |
| 5 | 50W–81828–M0 | .BOLT 2 | 1 | | | | | |
| 6 | 90202–26166 | WASHER, PLATE | 1 | | | | | |
| 7 | 3MB–82541–00 | WIRE, LEAD | 1 | | | | | |
| 8 | 98507–06025 | SCREW, PAN HEAD | 1 | | | | | |

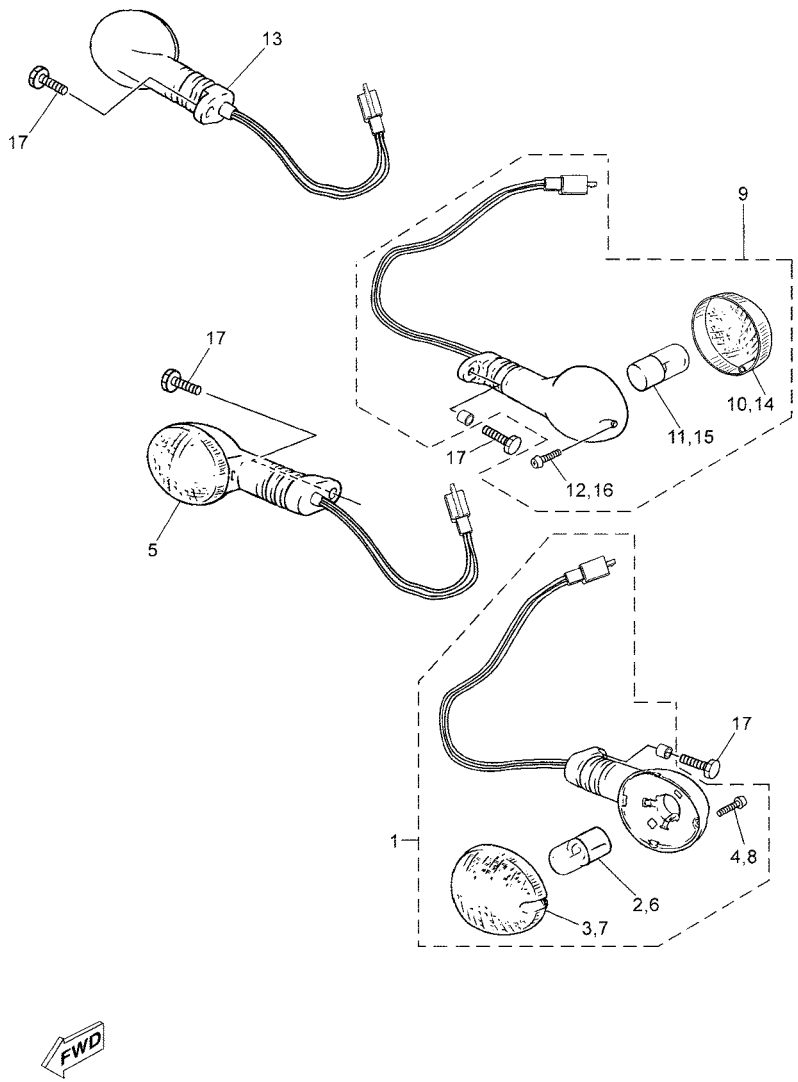


1D01300-C360

## FIG. 36 FLASHER LIGHT

| REF. NO. | PART NO. | DESCRIPTION | 2C81 | | | | | REMARKS |
|---|---|---|---|---|---|---|---|---|
| 1 | 1D0–H3310–00 | FRONT FLASHER LIGHT ASSY 1 | 1 | | | | | |
| 2 | 1D0–H3311–00 | .BULB, FLASHER | 1 | | | | | |
| 3 | 1D0–H3332–00 | .LENS, FLASHER | 1 | | | | | |
| 4 | 5AD–H3333–00 | .SCREW, LENS FITTING | 1 | | | | | |
| 5 | 1D0–H3320–00 | FRONT FLASHER LIGHT ASSY 2 | 1 | | | | | |
| 6 | 1D0–H3311–00 | .BULB, FLASHER | 1 | | | | | |
| 7 | 1D0–H3332–00 | .LENS, FLASHER | 1 | | | | | |
| 8 | 5AD–H3333–00 | .SCREW, LENS FITTING | 1 | | | | | |
| 9 | 1D0–H3330–00 | REAR FLASHER LIGHT ASSY 1 | 1 | | | | | |
| 10 | 1D0–H3311–00 | .BULB, FLASHER | 1 | | | | | |
| 11 | 1D0–H3332–00 | .LENS, FLASHER | 1 | | | | | |
| 12 | 5AD–H3333–00 | .SCREW, LENS FITTING | 1 | | | | | |
| 13 | 1D0–H3340–00 | REAR FLASHER LIGHT ASSY 2 | 1 | | | | | |
| 14 | 1D0–H3332–00 | .LENS, FLASHER | 1 | | | | | |
| 15 | 1D0–H3311–00 | .BULB, FLASHER | 1 | | | | | |
| 16 | 5AD–H3333–00 | .SCREW, LENS FITTING | 1 | | | | | |
| 17 | 9131M–06016 | BOLT | 4 | | | | | |

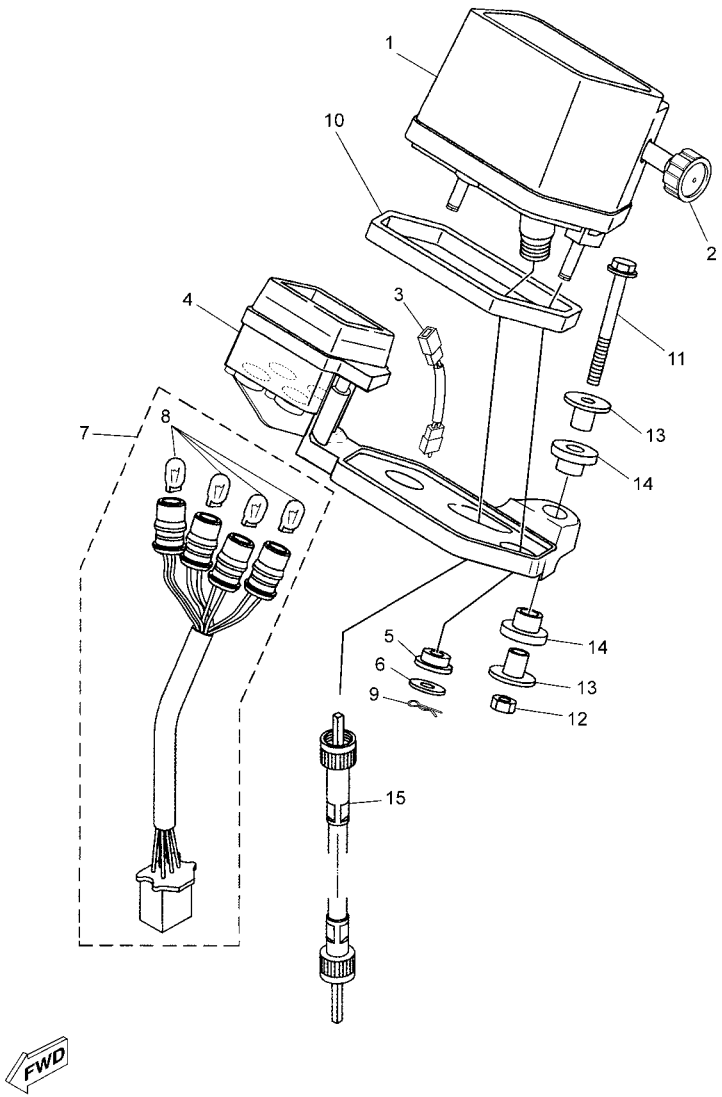


2C82300-E370

## FIG. 37 METER

| REF. NO. | PART NO. | DESCRIPTION | 2C81 | | | | | REMARKS |
|---|---|---|---|---|---|---|---|---|
| 1 | 1D0–H3570–00 | SPEEDOMETER ASSY | 1 | | | | | KM/H |
| | 1D0–H3570–10 | SPEEDOMETER ASSY | 1 | | | | | MPH |
| 2 | 1D0–H3578–00 | .KNOB, TRIP METER | 1 | | | | | |
| 3 | 1D0–H1815–00 | CORD, STARTER MOTOR | 1 | | | | | |
| 4 | 1D0–H355A–00 | BRACKET, METER | 1 | | | | | |
| 5 | 3XP–83526–00 | DAMPER 2 | 1 | | | | | |
| 6 | 90201–05033 | WASHER, PLATE | 2 | | | | | |
| 7 | 1D0–H8312–00 | SOCKET CORD ASSY | 1 | | | | | |
| 8 | 5HH–H3518–00 | BULB (12V-3.4W) | 4 | | | | | |
| 9 | 3XP–83525–00 | CLIP | 2 | | | | | |
| 10 | 3XP–83513–00 | DAMPER | 1 | | | | | |
| 11 | 95807–06050 | BOLT, FLANGE | 2 | | | | | |
| 12 | 90387–067W9 | COLLAR | 4 | | | | | |
| 13 | 90480–10632 | GROMMET | 4 | | | | | |
| 14 | 95607–06200 | NUT, SELF U-FLANGE | 2 | | | | | |
| 15 | 1L4–83550–04 | SPEEDOMETER CABLE ASSY | 1 | | | | | |

## FIG. 38 HEADLIGHT

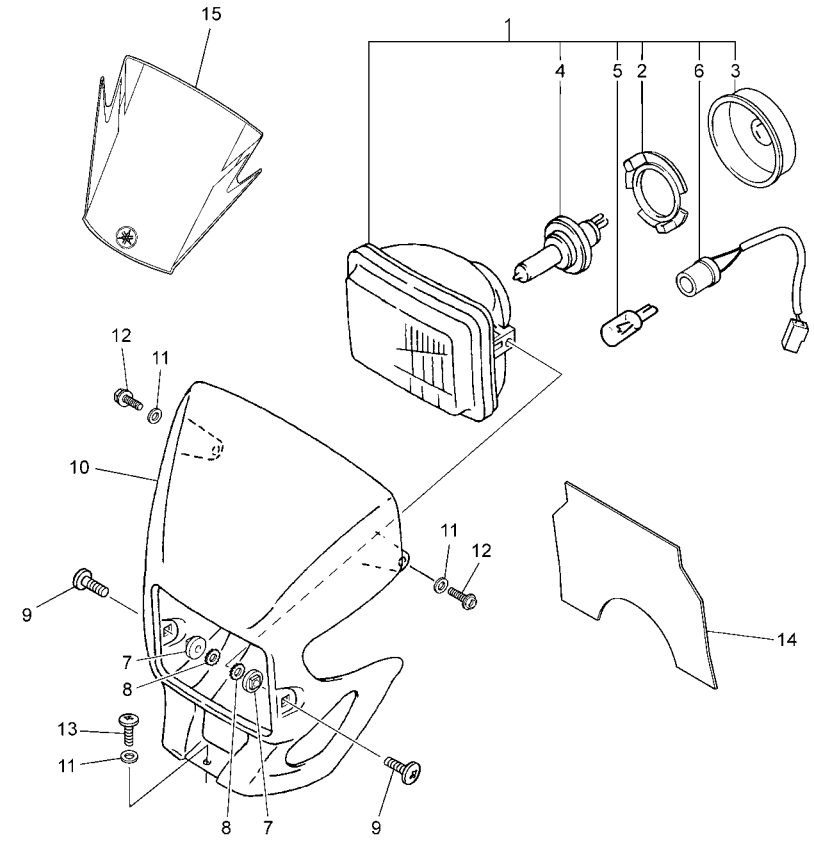

2C81300-C380

| REF. NO. | PART NO. | DESCRIPTION | 2C81 | | | | | REMARKS |
|---|---|---|---|---|---|---|---|---|
| 1 | 1D0–H4310–00 | HEADLIGHT UNIT ASSY | 1 | | | | | |
| 2 | 1D0–H4393–00 | .SPING SUPPORT | 1 | | | | | |
| 3 | 1D0–H4397–00 | .COVER, SOCKET | 1 | | | | | |
| 4 | 1D0–H4314–00 | .BULB (12V 60/55W) | 1 | | | | | |
| 5 | 1D0–H4347–00 | .BULB | 1 | | | | | |
| 6 | 1D0–H4312–00 | .CORD ASSY | 1 | | | | | |
| 7 | 1D0–H4307–00 | COLLAR | 2 | | | | | |
| 8 | 9290N–08100 | WASHER, SPRING | 2 | | | | | |
| 9 | 90150–06021 | SCREW, ROUND HEAD | 2 | | | | | |
| 10 | 1D0–H4330–10 | BODY ASSY | 1 | | | | | |
| 11 | 90387–06X05 | COLLAR | 3 | | | | | |
| 12 | 95827–06014 | BOLT, FLANGE | 2 | | | | | |
| 13 | 90150–06021 | SCREW, ROUND HEAD | 1 | | | | | |
| 14 | 1D0–H4196–00 | COVER, SOCKET | 1 | | | | | |
| 15 | 2C8–F339E–00 | GRAPHIC 1 | 1 | | | | | UR DPBS1 |
| | 2C8–F339E–10 | GRAPHIC 1 | 1 | | | | | UR YB |

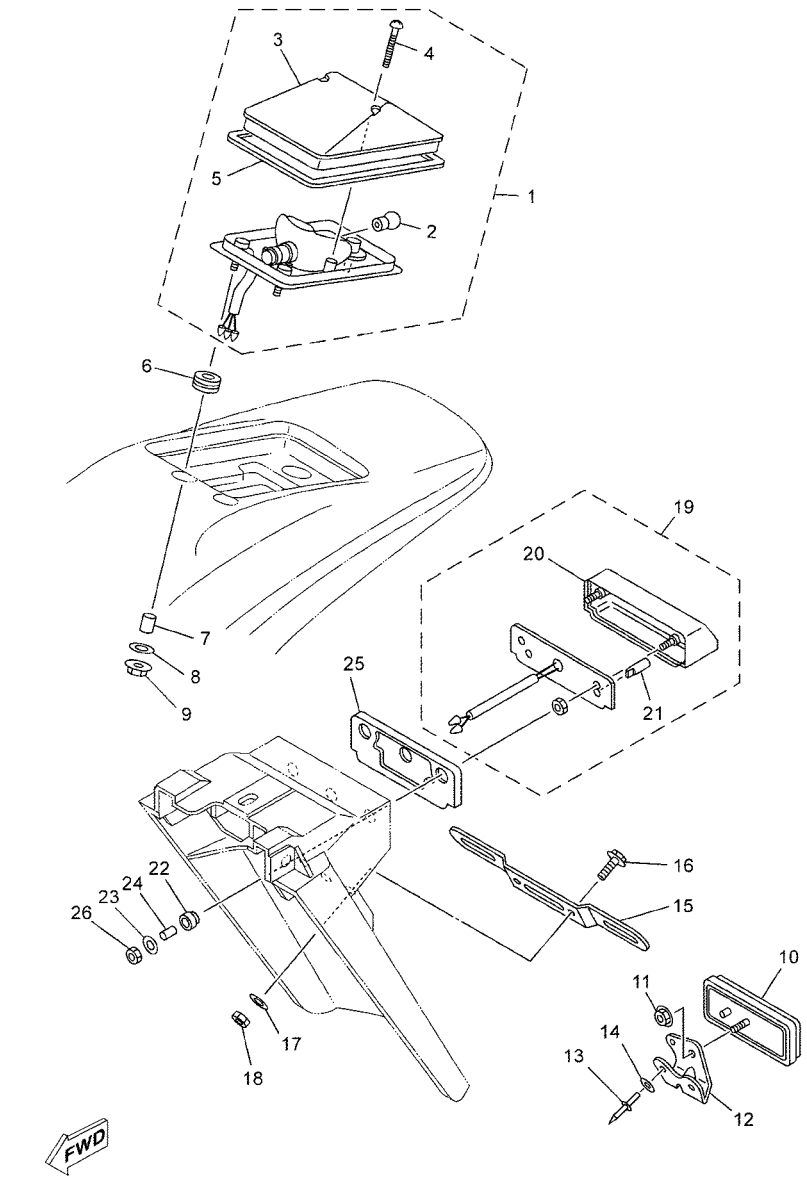


1D01300-C390

## FIG. 39 TAILLIGHT

| REF. NO. | PART NO. | DESCRIPTION | 2C81 | | | | | REMARKS |
|---|---|---|---|---|---|---|---|---|
| 1 | 4GY–84710–00 | TAILLIGHT UNIT ASSY | 1 | | | | | |
| 2 | 36Y–84714–40 | .BULB, TAILLIGHT (12V-21/5W) | 1 | | | | | |
| 3 | 4GY–84733–00 | .LENS, TAILLIGHT | 1 | | | | | |
| 4 | 97706–40530 | .SCREW, TAPPING | 2 | | | | | |
| 5 | 4GY–84723–00 | .GASKET, TAIL LENS | 1 | | | | | |
| 6 | 90480–14102 | GROMMET | 3 | | | | | |
| 7 | 90387–065L5 | COLLAR | 3 | | | | | |
| 8 | 90201–06057 | WASHER, PLATE | 3 | | | | | |
| 9 | 95707–06500 | NUT, FLANGE | 3 | | | | | |
| 10 | 3Y6–85130–02 | REAR REFLECTOR ASSY | 1 | | | | | |
| 11 | 9570M–05500 | NUT, FLANGE | 1 | | | | | |
| 12 | 33G–85132–02 | BRACKET, REFLECTOR 1 | 1 | | | | | |
| 13 | 90267–40090 | RIVET, BLIND | 2 | | | | | |
| 14 | 90201–04018 | WASHER, PLATE | 2 | | | | | |
| 15 | 3YF–84751–00 | BRACKET, LICENSE | 1 | | | | | |
| 16 | 95027–06012 | BOLT, FLANGE | 2 | | | | | |
| 17 | 90201–06821 | WASHER, PLATE | 2 | | | | | |
| 18 | 95307–06600 | NUT | 2 | | | | | |
| 19 | 4PX–84745–00 | LICENCE LIGHT UNIT ASSY | 1 | | | | | |
| 20 | 4FM–84749–00 | .BODY, LICENCE LIGHT | 1 | | | | | |
| 21 | 2JE–84744–00 | .BULB (12V-5W) | 2 | | | | | |
| 22 | 3F9–84553–00 | DAMPER | 2 | | | | | |
| 23 | 3F9–84754–00 | WASHER, SPECIAL | 2 | | | | | |
| 24 | 90387–066M1 | COLLAR | 2 | | | | | |
| 25 | 3F9–84742–00 | SEAT, BASE | 1 | | | | | |
| 26 | 95307–05600 | NUT | 2 | | | | | |

## FIG. 40 HANDLE SWITCH & LEVER

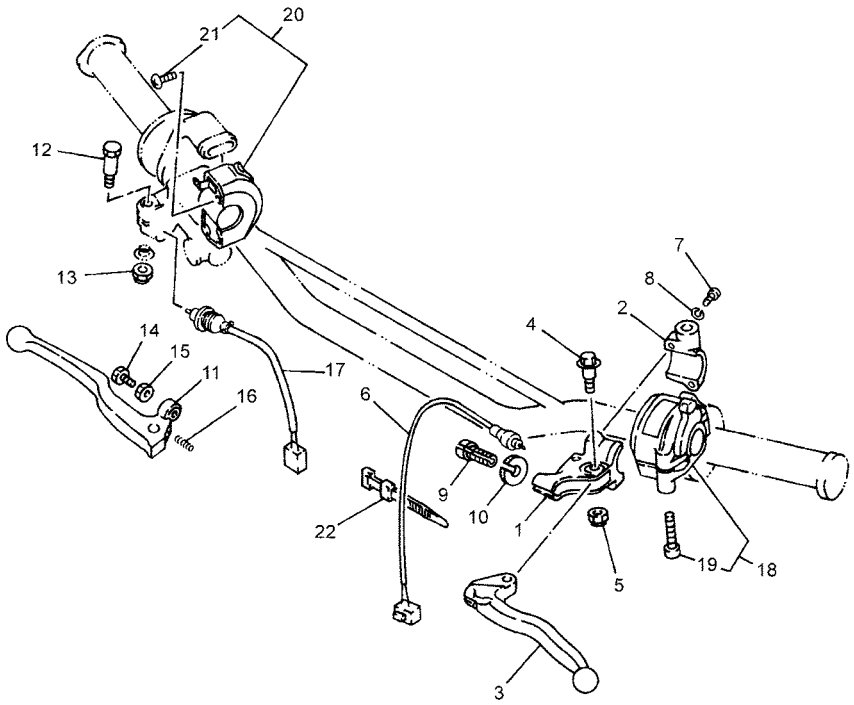

1D01300-C400

| REF. NO. | PART NO. | DESCRIPTION | 2C81 | | | | | REMARKS |
|---|---|---|---|---|---|---|---|---|
| 1 | 1LN–82911–00 | HOLDER, LEVER 1 | 1 | | | | | |
| 2 | 33G–82913–01 | HOLDER, LEVER LOWER 1 | 1 | | | | | |
| 3 | 4GY–83912–00 | LEVER 1 | 1 | | | | | |
| 4 | 90109–06799 | BOLT | 1 | | | | | |
| 5 | 95607–06100 | NUT, U | 1 | | | | | |
| 6 | 4GY–82917–01 | SWITCH | 1 | | | | | |
| 7 | 98507–05020 | SCREW, PAN HEAD | 2 | | | | | |
| 8 | 92907–05100 | WASHER, SPRING | 2 | | | | | |
| 9 | 90123–08046 | BOLT | 1 | | | | | |
| 10 | 90179–08148 | NUT | 1 | | | | | |
| 11 | 55Y–83922–00 | LEVER 2 | 1 | | | | | |
| 12 | 90109–06577 | BOLT | 1 | | | | | |
| 13 | 95607–06100 | NUT, U | 1 | | | | | |
| 14 | 90149–06131 | SCREW | 1 | | | | | |
| 15 | 90170–06010 | NUT | 1 | | | | | |
| 16 | 90501–10312 | SPRING, COMPRESSION | 1 | | | | | |
| 17 | 3DM–83980–00 | FRONT STOP SWITCH ASSY | 1 | | | | | |
| 18 | 4RR–83972–01 | SWITCH, HANDLE 4 | 1 | | | | | |
| 19 | 98507–05030 | .SCREW, PAN HEAD | 2 | | | | | |
| 20 | 4TP–83975–00 | SWITCH, HANDLE 2 | 1 | | | | | |
| 21 | 98507–05018 | .SCREW, PAN HEAD | 2 | | | | | |
| 22 | 437–83936–01 | BAND, SWITCH CORD | 2 | | | | | |

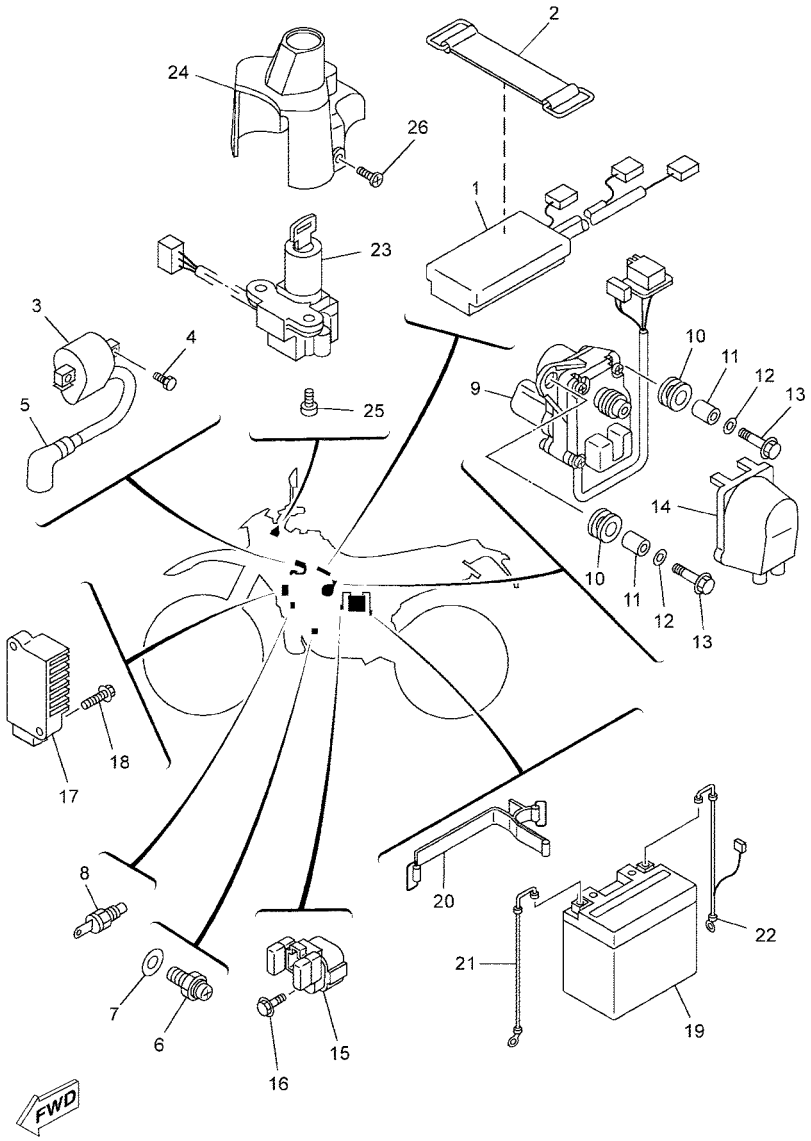


1D01300-C410

## FIG. 41 ELECTRICAL 1

| REF. NO. | PART NO. | DESCRIPTION | 2C81 | | | | | REMARKS |
|---|---|---|---|---|---|---|---|---|
| 1 | 1D0–H5540–00 | C.D.I. UNIT ASSY | 1 | | | | | |
| 2 | 122–82131–00 | BAND, BATTERY | 1 | | | | | |
| 3 | 3RW–H2310–00 | IGNITION COIL ASSY | 1 | | | | | |
| 4 | 90153–06059 | SCREW, HEXAGON | 2 | | | | | |
| 5 | 5AE–82370–00 | PLUG CAP ASSY | 1 | | | | | |
| 6 | 4GY–82540–10 | NEUTRAL SWITCH ASSY | 1 | | | | | |
| 7 | 90430–10148 | GASKET | 1 | | | | | |
| 8 | 4BA–82560–00 | THERMO SWITCH ASSY | 1 | | | | | |
| 9 | 1D0–H5820–00 | SERVO MOTOR ASSY | 1 | | | | | |
| 10 | 90480–14023 | GROMMET | 2 | | | | | |
| 11 | 90387–06299 | COLLAR | 2 | | | | | |
| 12 | 90201–06380 | WASHER, PLATE | 2 | | | | | |
| 13 | 97007–06025 | BOLT | 2 | | | | | |
| 14 | 34X–85825–01 | COVER, WIRE | 1 | | | | | |
| 15 | 1D0–81940–01 | STARTER RELAY ASSY | 1 | | | | | |
| 16 | 95027–06008 | BOLT, FLANGE | 2 | | | | | |
| 17 | 1D0–H1960–01 | RECTIFIER & REGULATOR ASSY | 1 | | | | | |
| 18 | 95027–06030 | BOLT, FLANGE | 2 | | | | | |
| 19 | 1D0–H2100–00 | BATTERY ASSY | 1 | | | | | |
| 20 | 4TP–82131–00 | BAND, BATTERY | 1 | | | | | |
| 21 | 4TP–82115–00 | WIRE, PLUS LEAD | 1 | | | | | |
| 22 | 4TP–82116–00 | WIRE, MINUS LEAD | 1 | | | | | |
| 23 | 4TP–82501–01 | MAIN SWITCH STEERING LOCK | 1 | | | | | |
| 24 | 4TP–82568–00 | COVER, MAIN SWITCH | 1 | | | | | |
| 25 | 90149–06X07 | SCREW | 2 | | | | | |
| 26 | 90154–05013 | SCREW, BINDING | 2 | | | | | |

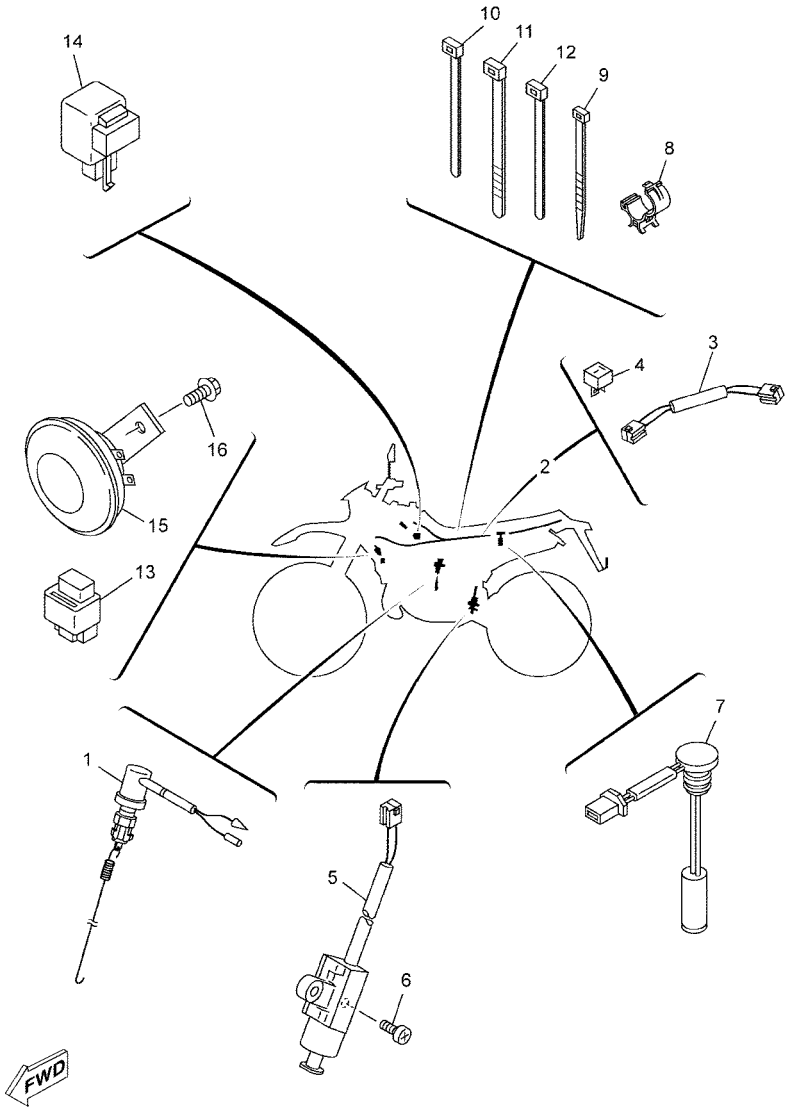


1D01300-C420

## FIG. 42 ELECTRICAL 2

| REF. NO. | PART NO. | DESCRIPTION | 2C81 | | | | | REMARKS |
|---|---|---|---|---|---|---|---|---|
| 1 | 4TP–82530–00 | STOP SWITCH ASSY | 1 | | | | | |
| 2 | 1D0–H2590–00 | WIRE HARNESS ASSY | 1 | | | | | |
| 3 | 5DS–H4148–00 | .WIRE, LEAD 1 | 1 | | | | | |
| 4 | 4YV–H1980–00 | .DIODE ASSY | 1 | | | | | |
| 5 | 3LD–82566–50 | SWITCH, SIDE STAND | 1 | | | | | |
| 6 | 98507–05014 | SCREW, PAN HEAD | 2 | | | | | |
| 7 | 3XP–85720–03 | OIL LEVEL GAUGE ASSY | 1 | | | | | |
| 8 | 90464–20191 | CLAMP | 1 | | | | | |
| 9 | 90464–12X02 | CLAMP | 1 | | | | | |
| 10 | 5Y9–12491–00 | CLAMP 1 | 1 | | | | | |
| 11 | 1UA–82591–00 | BAND | 2 | | | | | |
| 12 | 90464–15195 | CLAMP | 1 | | | | | |
| 13 | 25G–81950–01 | RELAY ASSY | 2 | | | | | |
| 14 | 3XV–83350–21 | FLASHER RELAY ASSY | 1 | | | | | |
| 15 | 1D0–H3371–00 | HORN | 1 | | | | | |
| 16 | 9580M–06012 | BOLT, FLANGE | 1 | | | | | |

NUMERICAL INDEX

| PART NO. | GRID NO. |
|---|---|
| 3MB–11111–01 | B – 2 |
| 3MB–11181–00 | B – 2 |
| 3MB–11311–00 | B – 2 |
| 3RM–1131A–00 | B – 2 |
| 3BN–1131E–00 | B – 2 |
| 2RH–1131M–10 | B – 2 |
| 2RH–1131R–10 | B – 2 |
| 31K–1131U–00 | B – 2 |
| 29L–1132E–00 | B – 2 |
| 3RM–1133E–00 | B – 3 |
| 3RM–1133F–00 | B – 3 |
| 3BN–11351–10 | B – 2 |
| 4FU–11400–00 | B – 4 |
| 3MB–11412–00 | B – 4 |
| 3MB–11422–00 | B – 4 |
| 2RH–11454–00 | B – 4 |
| 55K–11530–00 | B – 5 |
| 10V–11536–01 | B – 4 |
| 4FL–11603–00 | B – 4 |
| 4FL–11604–00 | B – 4 |
| 4FL–11605–00 | B – 4 |
| 3MB–11631–02–95 | B – 4 |
| 3MB–11633–00 | B – 4 |
| 3MB–11635–02 | B – 4 |
| 3MB–11636–02 | B – 4 |
| 4FU–11651–00 | B – 4 |
| 37F–11681–00 | B – 4 |
| 34X–12411–00 | B – 7 |
| 3BN–12414–10 | B – 7 |
| 3BN–12422–11 | B – 6 |
| 3BN–12428–11 | B – 6 |
| 1KT–12437–00 | B – 8 |
| 36F–12450–00 | B – 6 |
| 2RH–12459–00 | B – 6 |
| 3BN–12461–00 | B – 7 |
| 4FL–12462–00 | B – 7 |
| 3BN–12469–00 | B – 7 |
| 2TV–12476–01 | B – 7 |
| 3BN–12481–00 | B – 7 |
| 3BN–12483–00 | B – 7 |
| 2RH–12484–00 | B – 7 |
| 5Y9–12491–00 | E – 15 |
| 3RM–13101–32 | B – 9 |
| 4FL–13175–00 | B – 9 |
| 4FL–13176–00 | B – 9 |
| 10V–13178–01 | B – 9 |
| 50M–13342–00 | C – 4 |
| 1D0–13416–00 | B – 9 |

| PART NO. | GRID NO. |
|---|---|
| 353–13552–01 | B – 9 |
| 3ET–13565–01 | B – 10 |
| 1AE–13575–01 | B – 10 |
| 3ET–13581–00 | B – 10 |
| 3FW–13591–00 | B – 11 |
| 3MB–13610–00 | B – 10 |
| 2TV–13613–00 | B – 10 |
| 3MB–13613–00 | B – 10 |
| 3BN–13616–00 | B – 10 |
| 3MB–13616–00 | B – 10 |
| 1KT–13621–01 | B – 10 |
| 3ET–14103–00 | B – 12 |
| 3MB–14104–00 | B – 13 |
| 2MA–14107–28 | B – 12 |
| 4FU–1410A–00 | B – 12 |
| 2TV–14112–25 | B – 12 |
| 2RJ–14118–00 | B – 13 |
| 1KT–14131–00 | B – 12 |
| 8A7–14139–00 | B – 12 |
| 1NT–14142–17 | B – 12 |
| 137–14143–42 | B – 12 |
| 1KT–14147–00 | B – 12 |
| 1KT–14149–00 | B – 12 |
| 137–14153–00 | B – 12 |
| 3ET–14153–01 | B – 12 |
| 127–14161–00 | B – 12 |
| 3X3–14169–00 | B – 12 |
| 2MA–14185–00 | B – 12 |
| 537–14186–00 | B – 12 |
| 12R–14191–00 | B – 12 |
| 493–14196–00 | B – 13 |
| 3MB–14197–00 | B – 12 |
| 3X3–14197–00 | B – 12 |
| 1KT–14198–00 | B – 12 |
| 1D0–14411–01 | B – 10 |
| 4TP–14412–00 | B – 10 |
| 3BN–14421–01 | B – 10 |
| 3ET–14437–00 | B – 11 |
| 34X–1443E–00 | B – 11 |
| 3BN–14451–01 | B – 10 |
| 3BN–14452–00 | B – 10 |
| 3RM–14453–00 | B – 10 |
| 3BN–14458–00 | B – 10 |
| 3BN–14459–00 | B – 10 |
| 17W–14462–00 | B – 10 |
| 3PA–14613–10 | B – 14 |
| 4FU–14714–01 | B – 14 |
| 4KM–14714–01 | B – 15 |

| PART NO. | GRID NO. |
|---|---|
| 565–14771–00 | B – 14 |
| 5FC–14803–00 | B – 14 |
| 25G–14937–00 | B – 13 |
| 1KT–14994–00 | B – 12 |
| 3MB–15111–03 | C – 2 |
| 3BN–15121–04 | C – 2 |
| 37F–15128–00 | C – 2 |
| 3MB–15167–01 | C – 2 |
| 3MB–15168–01 | C – 2 |
| 3BN–15199–01 | C – 2 |
| 328–15316–00 | C – 2 |
| 3BN–15317–00 | C – 2 |
| 3Y1–15361–00 | C – 3 |
| 3Y1–15363–00 | C – 3 |
| 120–15371–00 | C – 2 |
| 3MB–15377–01 | C – 3 |
| 3MB–15411–11 | C – 3 |
| 3RM–15416–00 | C – 3 |
| 3RM–15421–00 | C – 3 |
| 3MB–15431–10 | C – 3 |
| 3BN–15441–00 | B – 2 |
| 3BN–15451–12 | C – 3 |
| 3MB–15455–12 | C – 3 |
| 3RM–15456–00 | C – 3 |
| 2RH–15492–00 | C – 2 |
| 3AY–15524–00 | C – 4 |
| 3MB–15532–00 | C – 4 |
| 3MB–15544–00 | C – 4 |
| 3AY–15580–01 | C – 4 |
| 3AY–15583–00 | C – 4 |
| 50W–15650–00 | C – 4 |
| 4FU–16111–00 | C – 5 |
| 3BN–16150–01 | C – 5 |
| 2TV–16154–00 | C – 5 |
| 21V–16321–00 | C – 5 |
| 1V1–16324–00 | C – 5 |
| 1HX–16331–00 | C – 5 |
| 37F–16351–00 | C – 5 |
| 1W1–16356–02 | C – 5 |
| 3R1–16357–00 | C – 5 |
| 1W1–16358–01 | C – 5 |
| 37F–16371–01 | C – 5 |
| 3BN–16380–00 | C – 5 |
| 3BN–16383–00 | C – 5 |
| 3BN–17121–00 | C – 7 |
| 3BN–17131–01 | C – 7 |
| 3BN–17151–01 | C – 7 |
| 3MB–17161–00 | C – 7 |

| PART NO. | GRID NO. |
|---|---|
| 2TV–17211–01 | C – 7 |
| 3BN–17221–00 | C – 7 |
| 3BN–17231–01 | C – 7 |
| 3XP–17241–00 | C – 7 |
| 3BN–17251–02 | C – 7 |
| 3XP–17261–00 | C – 7 |
| 3MB–17411–01 | C – 7 |
| 3BN–17421–00 | C – 7 |
| 3RM–17460–00 | C – 7 |
| 55K–17471–00 | C – 8 |
| 10W–18101–03 | C – 10 |
| 3MB–18110–00 | C – 10 |
| 1W6–18113–00 | C – 10 |
| 3BN–18140–00 | C – 9 |
| 55K–18511–01 | C – 9 |
| 2RH–18512–00 | C – 9 |
| 55K–18513–00 | C – 9 |
| 55K–18531–00 | C – 9 |
| 3BN–18535–00 | C – 9 |
| 3XP–18540–00 | C – 9 |
| 4TP–2117J–00 | D – 2 |
| 3ET–21339–00 | D – 2 |
| 3BN–2141E–00 | C – 11 |
| 3BN–21425–00 | C – 11 |
| 2K7–2148A–00 | C – 11 |
| 3BN–21642–00 | C – 13 |
| 4PX–21685–00 | C – 13 |
| 461–21717–00 | C – 14 |
| 3BN–2172A–00 | C – 14 |
| 1LX–2172F–01 | C – 14 |
| 4TP–2174X–00 | D – 2 |
| 4TP–21751–01 | D – 2 |
| 4TP–2176E–00 | D – 2 |
| 4U5–2176E–00 | C – 14 |
| 3BN–21770–01 | D – 2 |
| 1D0–2177A–00 | D – 2 |
| 22W–21791–00 | C – 14 |
| 1AA–21815–00 | D – 2 |
| 4TP–21871–00 | D – 2 |
| 1AA–21874–00 | D – 2 |
| 4TP–21877–00 | D – 2 |
| 4TP–22110–01–98 | D – 4 |
| 3R4–22141–00 | D – 4 |
| 1LN–22151–00 | D – 5 |
| 34X–22153–00 | D – 5 |
| 30X–22178–00 | C – 11 |
| 3BN–2217A–10 | D – 4 |
| 3BN–2217F–00 | D – 4 |

| PART NO. | GRID NO. |
|---|---|
| 10V–22184–00 | C – 11 |
| 30X–2219X–00 | D – 4 |
| 4GY–22898–50 | D – 15 |
| 3R4–23317–00 | D – 7 |
| 4PX–23318–00 | D – 9 |
| 4DA–23389–00 | D – 9 |
| 4JG–23416–00 | D – 7 |
| 3YF–23418–00 | D – 7 |
| 4TP–23435–00 | D – 7 |
| 1E6–23441–10–35 | D – 7 |
| 4TP–24141–00 | D – 10 |
| 5RS–24141–01 | D – 10 |
| 26H–24181–00 | D – 10 |
| 3BN–24182–00 | D – 10 |
| 34X–24186–01 | D – 10 |
| 4TP–24188–00 | D – 10 |
| 4TP–24500–00 | D – 10 |
| 4X8–24512–00 | D – 10 |
| 3AJ–24523–00 | D – 10 |
| 3AJ–24534–00 | D – 10 |
| 11H–24602–03 | D – 10 |
| 2C8–25104–10 | D – 12 |
| 2C8–25111–00–35 | D – 12 |
| 136–25115–00 | D – 12 |
| 55U–25181–01 | D – 12 |
| 2C8–25190–00 | D – 12 |
| 2C8–25304–00 | D – 14 |
| 3XP–25311–00–35 | D – 14 |
| 4V4–25367–00 | D – 14 |
| 3BN–25381–10 | D – 14 |
| 4TP–25383–00 | D – 14 |
| 3BN–25388–00 | D – 14 |
| 3BN–25389–00 | D – 14 |
| 4GY–25827–50 | D – 15 |
| 2VN–2582A–50 | E – 6 |
| 2C8–2583V–00 | E – 6 |
| 2VN–25852–50 | E – 6 |
| 2VN–25854–00 | E – 6 |
| 55U–25854–00 | E – 3 |
| 2VN–25855–00 | E – 6 |
| 2VN–25866–00 | E – 6 |
| 56A–25867–00 | E – 3 |
| 3BN–25876–00 | E – 6 |
| 3ET–25888–00 | E – 6 |
| 2VN–25894–00 | E – 6 |
| 4GY–25919–50 | D – 15 |
| 3SP–25924–51 | D – 15 |
| 4TP–26111–00 | E – 2 |

| PART NO. | GRID NO. |
|---|---|
| 4RR–26129–00 | E – 2 |
| 4GY–26241–00 | E – 2 |
| 4GY–26242–00 | E – 2 |
| 22W–26243–00 | E – 2 |
| 1D0–26279–00 | D – 7 |
| 5X2–26281–00 | E – 2 |
| 322–26282–00 | E – 2 |
| 5X2–2628H–01 | E – 2 |
| 3RM–26301–01 | E – 2 |
| 3BN–26335–00 | E – 2 |
| 1E6–26342–00 | E – 2 |
| 3BN–27211–01 | E – 4 |
| 2YK–27222–00 | E – 6 |
| 55V–27242–00 | E – 4 |
| 42U–27315–01 | E – 4 |
| 1TX–27351–00 | E – 4 |
| 3LD–27411–01 | E – 4 |
| 3LD–27421–01 | E – 4 |
| 4GY–27491–00 | D – 15 |
| 1D0–28100–00 | C – 11 |
| 4KG–2814E–10 | C – 12 |
| 4TP–28186–00 | C – 12 |
| 3MB–81800–02 | E – 8 |
| 50W–81801–M0 | E – 8 |
| 50W–81828–M0 | E – 8 |
| 3MB–8183G–01 | E – 8 |
| 1D0–81940–01 | E – 14 |
| 25G–81950–01 | E – 15 |
| 4TP–82115–00 | E – 14 |
| 4TP–82116–00 | E – 14 |
| 122–82131–00 | E – 14 |
| 4TP–82131–00 | E – 14 |
| 5AE–82370–00 | E – 14 |
| 4TP–82501–01 | E – 14 |
| 4TP–82530–00 | E – 15 |
| 4GY–82540–10 | E – 14 |
| 3MB–82541–00 | E – 8 |
| 4BA–82560–00 | E – 14 |
| 3LD–82566–50 | E – 15 |
| 4TP–82568–00 | E – 14 |
| 1UA–82591–00 | E – 15 |
| 1LN–82911–00 | E – 13 |
| 33G–82913–01 | E – 13 |
| 4GY–82917–01 | E – 13 |
| 3XV–83350–21 | E – 15 |
| 3XP–83513–00 | E – 10 |
| 3XP–83525–00 | E – 10 |
| 437–83525–00 | E – 4 |

NUMERICAL INDEX

| PART NO. | GRID NO. |
|---|---|
| 3XP–83526–00 | E – 10 |
| 1L4–83550–04 | E – 10 |
| 4GY–83912–00 | E – 13 |
| 55Y–83922–00 | E – 13 |
| 437–83936–01 | E – 13 |
| 4RR–83972–01 | E – 13 |
| 4TP–83975–00 | E – 13 |
| 3DM–83980–00 | E – 13 |
| 3F9–84553–00 | E – 12 |
| 4GY–84710–00 | E – 12 |
| 36Y–84714–40 | E – 12 |
| 4GY–84723–00 | E – 12 |
| 4GY–84733–00 | E – 12 |
| 3F9–84742–00 | E – 12 |
| 2JE–84744–00 | E – 12 |
| 4PX–84745–00 | E – 12 |
| 4FM–84749–00 | E – 12 |
| 3YF–84751–00 | E – 12 |
| 3F9–84754–00 | E – 12 |
| 3Y6–85130–02 | E – 12 |
| 33G–85132–02 | E – 12 |
| 4FU–85550–00 | E – 7 |
| 4FU–85560–02 | E – 7 |
| 3XP–85720–03 | E – 15 |
| 34X–85825–01 | E – 14 |
| 1D0–E111B–01 | B – 14 |
| 1D0–E112B–01 | B – 14 |
| 1D0–E2482–00 | B – 7 |
| 1D0–E4101–00 | B – 12 |
| 1D0–E414M–52 | B – 12 |
| 1D0–E4271–01 | B – 11 |
| 1D0–E4610–00 | B – 14 |
| 1D0–E4718–00 | B – 14 |
| 1D0–E4750–01 | B – 14 |
| 1D0–E4758–00 | B – 14 |
| 1D0–E4763–00 | B – 14 |
| 1D0–E4872–01 | B – 15 |
| 1D0–E4883–00 | B – 14 |
| 1D0–E4884–00 | B – 14 |
| 1D0–E490J–00 | B – 12 |
| 1D0–F1110–00–98 | C – 11 |
| 1D0–F118N–00 | C – 11 |
| 1D0–F1190–01 | C – 11 |
| 1D0–F137W–00 | C – 14 |
| 1D0–F137W–10 | C – 14 |
| 1D0–F137X–00 | C – 15 |
| 1D0–F137X–10 | C – 15 |
| 2C8–F1511–00 | C – 13 |

| PART NO. | GRID NO. |
|---|---|
| 1D0–F153A–10 | C – 13 |
| 1D0–F1611–10 | C – 13 |
| 1D0–F1639–00 | C – 13 |
| 1D0–F1711–10 | C – 14 |
| 1D0–F1721–10 | C – 14 |
| 1D0–F172K–00 | C – 14 |
| 1D0–F172L–00 | C – 14 |
| 2C8–F173E–00 | C – 15 |
| 2C8–F173E–10 | C – 15 |
| 1D0–F173T–00 | D – 3 |
| 1D0–F1746–00 | C – 14 |
| 1D0–F1746–10 | D – 2 |
| 1D0–F1747–00 | C – 14 |
| 1D0–F1747–10 | C – 14 |
| 1D0–F174A–01 | C – 15 |
| 2C8–F174G–00 | C – 15 |
| 2C8–F174G–10 | C – 15 |
| 2C8–F174H–00 | C – 15 |
| 2C8–F174H–10 | C – 15 |
| 1D0–F174T–01 | D – 3 |
| 1D0–F174X–00 | C – 14 |
| 1D0–F174Y–00 | C – 14 |
| 1D0–F175C–00 | C – 15 |
| 1D0–F1816–00 | D – 2 |
| 2C8–F2210–00 | D – 6 |
| 2C8–F2311–00 | D – 5 |
| 2C8–F3102–00 | D – 8 |
| 2C8–F3103–00 | D – 8 |
| 2C8–F3108–00 | D – 8 |
| 2C8–F3110–00 | D – 8 |
| 2C8–F3111–00 | D – 8 |
| 2C8–F3118–00 | D – 8 |
| 2C8–F3125–00 | D – 8 |
| 2C8–F3126–00 | D – 8 |
| 5VK–F3128–00 | D – 9 |
| 2C8–F3136–00 | D – 8 |
| 1D0–F313B–00 | D – 9 |
| 2C8–F3141–00 | D – 8 |
| 2C8–F3144–00 | D – 8 |
| 2C8–F3145–00 | D – 8 |
| 2C8–F3146–00 | D – 8 |
| 2C8–F3149–00 | D – 8 |
| 2C8–F3151–00 | D – 8 |
| 2C8–F3156–00 | D – 8 |
| 2C8–F3157–00 | D – 8 |
| 5VK–F3158–00 | D – 8 |
| 2C8–F3170–00 | D – 8 |
| 2C8–F3171–00 | D – 8 |

| PART NO. | GRID NO. |
|---|---|
| 2C8–F3173–00 | D – 8 |
| 2C8–F3174–00 | D – 7 |
| 5VK–F3181–00 | D – 8 |
| 2C8–F3188–00 | D – 8 |
| 2C8–F331E–00 | D – 9 |
| 2C8–F331G–00 | D – 9 |
| 2C8–F3340–00 | D – 9 |
| 2C8–F3389–00 | D – 9 |
| 2C8–F339E–00 | E – 11 |
| 2C8–F339E–10 | E – 11 |
| 2C8–F3466–00 | D – 7 |
| 2C8–F4110–00–33 | D – 10 |
| 2C8–F4110–00–P0 | D – 10 |
| 5DS–F415E–00 | C – 13 |
| 2C8–F424A–00 | D – 10 |
| 2C8–F424A–10 | D – 10 |
| 2C8–F424B–00 | D – 10 |
| 2C8–F424B–10 | D – 10 |
| 1D0–F4311–00 | D – 10 |
| 2C8–F4730–00 | D – 11 |
| 2C8–F4730–10 | D – 11 |
| 1D0–F4734–00 | D – 11 |
| 1D0–F4734–10 | D – 11 |
| 1D0–F5457–00 | D – 14 |
| 2C8–F580T–00 | D – 13 |
| 2C8–F580W–00 | D – 15 |
| 5VK–F581T–00 | D – 13 |
| 5SE–F5824–00 | D – 13 |
| 5DS–F5825–00 | D – 13 |
| 2C8–F582W–00 | D – 15 |
| 2C8–F583T–00 | E – 3 |
| 2C8–F5852–00 | E – 3 |
| 2C8–F5872–00 | E – 3 |
| 2C8–F5873–00 | E – 6 |
| 1D0–F5895–00 | E – 6 |
| 5DS–F5917–00 | D – 13 |
| 5VK–F5919–00 | D – 13 |
| 5VK–F5924–00 | D – 13 |
| 1D0–F6280–00 | E – 2 |
| 1D0–F6290–00 | E – 2 |
| 2C8–F7311–00 | E – 4 |
| 5WX–F7431–00 | E – 4 |
| 1D0–F7432–00 | E – 4 |
| 5WX–F7441–00 | E – 4 |
| 1D0–F7442–00 | E – 4 |
| 2C8–F8199–E0 | C – 11 |
| 2C8–F8199–F0 | C – 11 |
| 2C8–F8199–G0 | C – 11 |

| PART NO. | GRID NO. |
|---|---|
| 2C8–F8199–H0 | C – 11 |
| 2C8–F8199–P0 | C – 11 |
| 2C8–F8199–S0 | C – 11 |
| 1D0–F831V–00 | D – 7 |
| 1D0–F832V–00 | D – 7 |
| 1D0–H1815–00 | E – 10 |
| 1D0–H1960–01 | E – 14 |
| 4YV–H1980–00 | E – 15 |
| 1D0–H2100–00 | E – 14 |
| 3RW–H2310–00 | E – 14 |
| 1D0–H253E–01 | D – 2 |
| 1D0–H253F–01 | D – 3 |
| 1D0–H254E–01 | D – 3 |
| 1D0–H2590–00 | E – 15 |
| 1D0–H3310–00 | E – 9 |
| 1D0–H3311–00 | E – 9 |
| 1D0–H3320–00 | E – 9 |
| 1D0–H3330–00 | E – 9 |
| 1D0–H3332–00 | E – 9 |
| 5AD–H3333–00 | E – 9 |
| 1D0–H3340–00 | E – 9 |
| 1D0–H3371–00 | E – 15 |
| 5HH–H3518–00 | E – 10 |
| 1D0–H355A–00 | E – 10 |
| 1D0–H3570–00 | E – 10 |
| 1D0–H3570–10 | E – 10 |
| 1D0–H3578–00 | E – 10 |
| 5DS–H4148–00 | E – 15 |
| 1D0–H4196–00 | E – 11 |
| 1D0–H4307–00 | E – 11 |
| 1D0–H4310–00 | E – 11 |
| 1D0–H4312–00 | E – 11 |
| 1D0–H4314–00 | E – 11 |
| 1D0–H4330–10 | E – 11 |
| 1D0–H4347–00 | E – 11 |
| 1D0–H4393–00 | E – 11 |
| 1D0–H4397–00 | E – 11 |
| 1D0–H5540–00 | E – 14 |
| 1D0–H5820–00 | E – 14 |
| 1D0–H8312–00 | E – 10 |
| 59X–W0041–00 | E – 3 |
| 3BN–W0042–50 | E – 6 |
| 2C8–W0045–00 | D – 13 |
| 4GY–W0046–00 | D – 15 |
| 3JD–W0047–50 | D – 15 |
| 1UY–W0048–50 | D – 15 |
| 3SP–W0057–50 | D – 15 |
| 90105–08391 | C – 11 |

| PART NO. | GRID NO. |
|---|---|
| 90105–10069 | D – 13 |
| 90105–10111 | C – 11 |
| 90109–063F7 | C – 9 |
| 90109–06577 | E – 13 |
| 90109–065F3 | D – 15 |
| 90109–06799 | E – 13 |
| 90109–081F0 | D – 13 |
| 90109–08618 | D – 14 |
| 90109–100E2 | D – 6 |
| 90109–10474 | E – 4 |
| 90109–10704 | D – 6 |
| 90110–08048 | B – 14 |
| 90116–08042 | B – 3 |
| 90116–08318 | B – 2 |
| 90116–08388 | B – 2 |
| 90116–08394 | B – 2 |
| 90119–05001 | C – 5 |
| 90119–05071 | D – 9 |
| 90119–06056 | D – 2 |
| 90119–06096 | D – 5 |
| 90119–06117 | D – 5 |
| 90119–06118 | D – 2 |
| 90119–06123 | B – 11 |
| 90119–06194 | C – 13 |
| 90119–06205 | D – 2 |
| 90119–06681 | C – 13 |
| 90123–08046 | E – 13 |
| 90149–04318 | B – 9 |
| 90149–06011 | D – 10 |
| 90149–06039 | B – 10 |
| 90149–06131 | E – 13 |
| 90149–06223 | C – 14 |
| 90149–06305 | C – 14 |
| 90149–06X07 | E – 14 |
| 90149–08269 | E – 4 |
| 90150–06021 | C – 13 |
| | C – 14 |
| | E – 11 |
| 90151–06041 | C – 4 |
| 90153–06059 | E – 14 |
| 90154–05011 | B – 10 |
| 90154–05013 | E – 14 |
| 90154–05074 | C – 14 |
| 90157–05079 | B – 9 |
| 90157–06071 | C – 2 |
| | C – 8 |
| 90159–04053 | D – 2 |
| 90159–05083 | C – 14 |

| PART NO. | GRID NO. |
|---|---|
| 90159–05163 | C – 14 |
| 90159–06017 | C – 4 |
| 90159–06056 | E – 6 |
| 90170–06010 | E – 13 |
| 90170–12370 | B – 5 |
| | C – 5 |
| 90175–06012 | B – 10 |
| 90176–08040 | B – 2 |
| 90176–22081 | D – 7 |
| 90179–08148 | E – 13 |
| 90179–08270 | B – 14 |
| 90179–08299 | B – 2 |
| 90179–12248 | E – 7 |
| 90179–12659 | C – 5 |
| 90179–16226 | C – 8 |
| 90179–25615 | D – 7 |
| 90183–05073 | B – 11 |
| 90183–06053 | C – 14 |
| 90183–06X01 | B – 15 |
| 90185–08143 | C – 11 |
| 90185–08146 | D – 14 |
| 90185–10037 | E – 4 |
| 90185–10060 | C – 11 |
| 90185–10120 | D – 6 |
| 90185–14112 | D – 4 |
| 90185–16127 | D – 4 |
| 90185–18104 | D – 14 |
| 90201–04018 | E – 12 |
| 90201–044H9 | D – 2 |
| 90201–05033 | E – 10 |
| 90201–06057 | E – 12 |
| 90201–06072 | B – 7 |
| 90201–060A3 | B – 14 |
| 90201–06380 | E – 14 |
| 90201–06765 | D – 11 |
| 90201–06821 | E – 12 |
| 90201–08040 | B – 14 |
| 90201–08083 | E – 6 |
| 90201–08092 | C – 4 |
| 90201–08512 | B – 6 |
| 90201–08649 | B – 2 |
| 90201–086P8 | E – 4 |
| 90201–08753 | C – 11 |
| 90201–100E9 | C – 11 |
| | D – 6 |
| 90201–10118 | E – 3 |
| | E – 6 |
| 90201–106F2 | D – 4 |

| PART NO. | GRID NO. |
|---|---|
| 90201–120E8 | C – 5 |
| 90201–123L6 | E – 7 |
| 90201–14217 | C – 5 |
| 90201–15700 | C – 7 |
| 90201–160F6 | D – 4 |
| 90201–164H4 | D – 4 |
| 90201–170M2 | C – 2 |
| 90201–180P2 | C – 5 |
| 90201–20266 | C – 7 |
| 90201–204M9 | D – 14 |
| 90201–220T0 | D – 7 |
| 90201–22555 | C – 7 |
| 90201–251F6 | D – 4 |
| 90201–254H8 | D – 4 |
| 90202–05193 | D – 10 |
| 90202–26166 | E – 8 |
| 90202–26X00 | D – 7 |
| 90208–18046 | C – 5 |
| 90209–06096 | B – 10 |
| 90209–06187 | D – 5 |
| 90209–18135 | C – 7 |
| 90209–22292 | B – 4 |
| 90215–12271 | C – 5 |
| 90215–12272 | B – 5 |
| 90215–20283 | C – 7 |
| 90240–06042 | E – 5 |
| 90240–08124 | E – 6 |
| 90240–10101 | E – 4 |
| 90267–40090 | E – 12 |
| 90267–40191 | D – 2 |
| 90269–07071 | C – 13 |
| 90280–03017 | B – 4 |
| 90282–05034 | B – 4 |
| 90282–05047 | B – 4 |
| 90338–11125 | D – 12 |
| 90338–16029 | C – 2 |
| 90338–30096 | C – 3 |
| 90340–14068 | C – 3 |
| 90380–16077 | D – 4 |
| 90380–22111 | D – 4 |
| 90386–20120 | D – 4 |
| 90387–06023 | B – 14 |
| 90387–061V4 | D – 15 |
| 90387–06299 | E – 14 |
| 90387–062V8 | C – 13 |
| 90387–064H8 | E – 5 |
| 90387–065L5 | E – 12 |
| 90387–066M1 | E – 12 |

| PART NO. | GRID NO. |
|---|---|
| 90387–067W9 | E – 10 |
| 90387–06X05 | E – 11 |
| 90387–0714B | B – 7 |
| 90387–082J1 | D – 2 |
| 90387–085G3 | B – 14 |
| 90387–15008 | D – 12 |
| 90387–164U7 | D – 4 |
| 90387–164U8 | D – 4 |
| 90387–202T9 | B – 4 |
| 90387–202U8 | D – 14 |
| 90387–204U9 | D – 14 |
| 90387–205U0 | C – 7 |
| 90401–06115 | B – 7 |
| 90401–10X04 | E – 3 |
| | E – 6 |
| 90401–14136 | D – 4 |
| 90402–10005 | D – 4 |
| 90405–06044 | B – 7 |
| 90430–04229 | B – 9 |
| 90430–06166 | B – 6 |
| | B – 7 |
| 90430–08119 | C – 3 |
| 90430–10148 | E – 14 |
| 90445–056K7 | B – 9 |
| 90446–07349 | C – 2 |
| 90450–28014 | B – 7 |
| 90450–44046 | B – 10 |
| 90462–08189 | C – 2 |
| 90462–10190 | C – 2 |
| 90462–10211 | C – 2 |
| 90464–12X02 | E – 15 |
| 90464–15195 | E – 15 |
| 90464–20191 | E – 15 |
| 90465–08122 | C – 2 |
| | D – 2 |
| 90465–20396 | C – 3 |
| 90467–08003 | B – 9 |
| | D – 2 |
| 90467–10038 | B – 7 |
| 90467–10039 | B – 7 |
| 90467–11044 | E – 6 |
| 90467–11106 | B – 11 |
| 90467–11X01 | D – 2 |
| | D – 10 |
| 90467–16X00 | B – 15 |
| 90467–20050 | B – 7 |
| | B – 10 |
| 90467–35121 | B – 11 |

| PART NO. | GRID NO. |
|---|---|
| 90468–02033 | B – 9 |
| 90468–08086 | B – 9 |
| 90480–01141 | C – 14 |
| 90480–10632 | E – 10 |
| 90480–12581 | B – 14 |
| 90480–14023 | E – 14 |
| 90480–14102 | E – 12 |
| 90480–15363 | B – 7 |
| 90480–18575 | B – 14 |
| 90501–02639 | C – 4 |
| 90501–08430 | B – 9 |
| 90501–10312 | E – 13 |
| 90501–12743 | E – 4 |
| 90501–20644 | C – 5 |
| 90506–18224 | E – 4 |
| 90506–18305 | E – 4 |
| 90506–26225 | E – 4 |
| 90508–14352 | E – 4 |
| 90508–18765 | C – 5 |
| 90508–20583 | E – 4 |
| 90508–26561 | C – 9 |
| 90508–32553 | C – 10 |
| 90560–06244 | C – 13 |
| 90560–08066 | D – 2 |
| 90560–15161 | D – 12 |
| 90560–20278 | D – 14 |
| 91317–05010 | B – 2 |
| 91317–05012 | B – 2 |
| 91317–06012 | C – 4 |
| 9131M–05012 | B – 2 |
| 9131M–06016 | C – 13 |
| | D – 7 |
| | E – 9 |
| 91401–16012 | E – 5 |
| | E – 6 |
| 91401–20012 | E – 4 |
| 91401–25015 | E – 4 |
| 91701–06022 | E – 4 |
| 92017–06016 | E – 6 |
| 92017–08016 | E – 5 |
| 92902–04100 | B – 12 |
| 92907–03100 | B – 10 |
| 92907–05100 | E – 6 |
| | E – 13 |
| 92907–05600 | B – 8 |
| | E – 6 |
| 92907–06100 | B – 2 |
| 92907–06200 | C – 5 |

| PART NO. | GRID NO. |
|---|---|
| 92907–06600 | B – 2 |
| | C – 2 |
| 9290M–05200 | B – 11 |
| 9290M–06200 | E – 6 |
| 9290N–08100 | E – 11 |
| 93101–10001 | B – 9 |
| 93101–12173 | C – 10 |
| 93102–23002 | D – 12 |
| 93102–25331 | B – 4 |
| 93102–26042 | C – 7 |
| 93103–10147 | B – 6 |
| 93103–32099 | B – 4 |
| 93104–14004 | C – 5 |
| 93106–22019 | D – 4 |
| 93106–28023 | D – 14 |
| 93108–23010 | B – 2 |
| 93108–35004 | D – 4 |
| 93109–20076 | D – 4 |
| 93210–07100 | B – 9 |
| 93210–12095 | C – 2 |
| 93210–12327 | B – 7 |
| 93210–14369 | C – 3 |
| 93210–15620 | E – 6 |
| 93210–18397 | B – 9 |
| 93210–19123 | C – 3 |
| 93210–27194 | B – 7 |
| 93210–30640 | B – 2 |
| 93210–44678 | E – 8 |
| 93306–00416 | D – 14 |
| 93306–20201 | C – 7 |
| 93306–20212 | D – 12 |
| 93306–20335 | B – 4 |
| 93306–20348 | D – 12 |
| 93306–20431 | C – 7 |
| 93306–30210 | B – 4 |
| 93306–30438 | C – 7 |
| 93306–30556 | B – 4 |
| 93310–230B1 | C – 4 |
| 93310–316B4 | B – 4 |
| 93310–523D2 | B – 4 |
| 93311–31567 | C – 7 |
| 93315–21429 | C – 6 |
| 93315–22251 | D – 4 |
| 93315–32052 | D – 4 |
| 93332–00008 | D – 7 |
| 93399–99931 | D – 7 |
| 93410–20038 | C – 7 |
| 93410–22039 | C – 7 |

| PART NO. | GRID NO. |
|---|---|
| 93430–08007 | B – 9 |
| 93450–17129 | B – 4 |
| 93501–04011 | E – 4 |
| 93503–16003 | C – 5 |
| 93603–22028 | B – 6 |
| | B – 9 |
| 93604–10011 | B – 6 |
| 93606–14081 | C – 3 |
| 93610–10174 | C – 4 |
| 93700–06004 | D – 4 |
| 94430–17003 | D – 12 |
| 94435–17003 | D – 14 |
| 94581–33134 | D – 14 |
| 94681–33011 | D – 14 |
| 94701–00204 | B – 2 |
| 95024–08035 | D – 7 |
| 95027–06008 | E – 14 |
| 95027–06010 | C – 3 |
| 95027–06012 | E – 12 |
| 95027–06016 | D – 15 |
| 95027–06020 | E – 7 |
| 95027–06030 | E – 14 |
| 95027–06035 | C – 3 |
| 95027–06060 | D – 5 |
| 95027–08012 | C – 11 |
| 95027–08040 | D – 7 |
| 9502M–06025 | E – 3 |
| 95307–05600 | E – 12 |
| 95307–06600 | C – 5 |
| | E – 12 |
| 95307–08600 | E – 6 |
| 95607–04100 | D – 2 |
| 95607–06100 | E – 13 |
| 95607–06200 | E – 10 |
| 95607–08200 | C – 11 |
| 95707–06500 | E – 12 |
| 9570L–08500 | D – 9 |
| 9570M–05500 | E – 12 |
| 95807–06010 | C – 14 |
| 95807–06050 | D – 5 |
| | E – 10 |
| 95807–08050 | C – 11 |
| 95807–08080 | C – 3 |
| 9580M–06010 | C – 14 |
| 9580M–06012 | B – 14 |
| | D – 11 |
| | E – 15 |
| 9580M–06016 | D – 7 |

| PART NO. | GRID NO. |
|---|---|
| 9580M–06025 | B – 7 |
| 95817–06012 | C – 11 |
| 95817–08045 | C – 11 |
| 95817–10016 | D – 4 |
| 9581L–08055 | D – 9 |
| 95827–06012 | C – 11 |
| 95827–06014 | E – 11 |
| 95827–06016 | D – 10 |
| 95827–06025 | B – 6 |
| | B – 14 |
| 95827–08030 | B – 14 |
| 97007–05012 | B – 8 |
| 97007–06008 | D – 3 |
| 97007–06010 | C – 2 |
| 97007–06025 | E – 14 |
| 97017–06020 | C – 10 |
| 97027–06018 | B – 2 |
| 97507–06420 | D – 11 |
| 97706–40530 | E – 12 |
| 97707–50520 | B – 10 |
| 97880–06030 | C – 3 |
| 98502–04014 | B – 12 |
| 98507–03008 | B – 10 |
| | D – 10 |
| 98507–04008 | B – 12 |
| 98507–05014 | E – 15 |
| 98507–05016 | E – 2 |
| 98507–05018 | E – 13 |
| 98507–05020 | E – 6 |
| | E – 13 |
| 98507–05030 | E – 13 |
| 98507–06012 | B – 7 |
| 98507–06020 | B – 7 |
| 98507–06025 | B – 6 |
| | E – 8 |
| 98507–06030 | C – 3 |
| 98507–06035 | C – 3 |
| 98507–06040 | C – 2 |
| | C – 3 |
| 98507–06050 | C – 2 |
| 98507–06060 | C – 2 |
| | C – 3 |
| 98507–06065 | B – 6 |
| | C – 2 |
| 98507–08010 | C – 2 |
| 9850M–06020 | C – 3 |
| 98706–04012 | E – 3 |
| 98707–04012 | E – 2 |

| PART NO. | GRID NO. |
|---|---|
| 98907–05014 | B – 11 |
| 98980–06012 | B – 14 |
| 98980–06016 | B – 14 |
| 99001–07600 | B – 6 |
| 99001–10600 | C – 10 |
| 99009–10400 | C – 9 |
| 99009–15400 | C – 7 |
| 99530–10114 | B – 2 |
| | C – 3 |
| 99530–12016 | C – 2 |

| PART NO. | GRID NO. |
|---|---|

| PART NO. | GRID NO. |
|---|---|

| PART NO. | GRID NO. |
|---|---|

| PART NO. | GRID NO. |
|---|---|

| PART NO. | GRID NO. |
|---|---|